BRITISH RAILWAY MODELLING STANDARDS BUREAU

STANDARD DIMENSIONS

— 1950 —

RAIL – TRACK – WHEELS – BUFFERS – CONDUCTOR RAILS

Any communication in respect of these dimensions should be made to the Secretary, G. H. LAKE.

PRICE
ONE SHILLING

Published for the B.R.M.S.B. by the Model Engineering Trade Association at their office at 156, Camden High Street, London, N.W.1.

BRITISH RAILWAY MODELLING STANDARDS BUREAU

INTRODUCTION

The BRITISH RAILWAY MODELLING STANDARDS BUREAU is an entirely independent body founded in 1941, with Mr. J. N. Maskelyne as its Chairman, with the object of working out standard dimensions for the several scales and gauges now existing in the railway modelling hobby. Prior to the second world war there were no agreed working dimensions in this country and the few well-known manufacturers of model railway equipment worked more or less to their own ideas of the subject. True, the scales for each gauge were fairly consistent, i.e. 3.5mm. for HO, 4mm. for OO, 7mm. for O, 10mm. for 1, but it was in the matter of wheel profiles and rail sections that the largest discrepancies were apparent, and, as is well known to the older modellers, once one had decided on any particular manufacturer's track and wheels, it was virtually impossible to use those of other makes in the same gauge. Further, there was the vexed question of the wheel back-to-back measurement, probably the most vital dimension on a model railway if trouble-free running is to be obtained. Each gauge had several variants of this dimension which virtually prevented a free interchange of running between users of the same gauge. Therefore, whatever advantages that may have accrued to the manufacturer of equipment under these conditions, there were certainly none for the user, and it is solely with this point in view that the B.R.M.S.B. *recommend* the adoption of the dimensions contained in the sheets. The figures are the outcome of many meetings of the people concerned—manufacturers, editors of the Model Railway Press, and representatives of the principal Societies of this country. The membership of the Bureau has varied slightly as occasion demanded.

In presenting these proposed standard dimensions to the modelling fraternity it cannot be too strongly stressed that they are only the recommended figures for all to use. There is nothing dogmatic about them at all, but they have been calculated to give the best possible trouble-free running, interchangeability within each gauge, together with considerations of manufacturer—a very important point which the highly skilled amateur model-maker tends to overlook. In working out the dimensions the gauge has been based on a prototype measurement of about 4ft. 6in., the reason for this being the unfortunate necessity of radius curves in conjunction with long wheel-based six-coupled locomotives with outside cylinders and valve gear. There is nothing whatever to prevent a modeller working to dead scale if he wishes, provided that he is prepared to operate on scale-radius curves with everything else in proportion. Likewise, a modeller can also adopt his own dimensions if he wishes to and is willing to operate his model railway in isolation.

The Council of the Model Engineering Trade Association have agreed to adopt the dimensions contained herein as the standard for their manufacturer members to adhere to but it should be noted that because of this they are *not* to be regarded as M.E.T.A. standards but still remain the B.R.M.S.B. standard dimensions.

It is quite probable that the dimensions set out within will have to be slightly modified from time to time in the light of further experience and progress.

SUMMARY OF GAUGES AND NOTES

Reference Letter	Title of Gauge	Scale to the Foot	Track Gauge	Equivalent Prototype Gauge in Feet	Remarks
	Prototype	304.8mm.	1,435mm.	4.71	
B	**HO–gauge(16.5)**	3.5mm.	16.5mm.	4.73	
C	**OO–gauge(16.5)**	4mm.	16.5mm.	4.12	
D	**EM–gauge(18.0)**	4mm.	18.0mm.	4.50	
D_1	**EMF–gauge(18.0)**	4mm.	18.0mm.	4.50	Fine Scale
F	**O–gauge(32.0)**	7mm.	32.0mm.	4.57	
F_1	**OF–gauge(32.0)**	7mm.	32.0mm.	4.57	Fine Scale
G	**1–gauge(45.0)**	10mm.	45.0mm.	4.50	

NOTE.—The reference letters A and E have been left blank for possible standards for 2mm. scale and "half-one" gauge respectively.

NOTES :

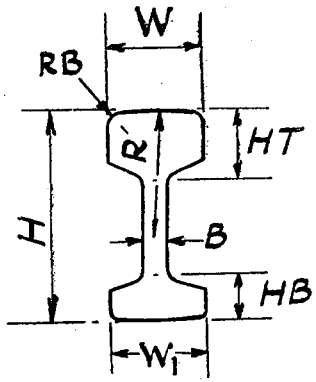

RAIL SECTION

(BULL HEAD)

Ref. letter			W	H	B	R	W_1	HT	HB	RB
B	**HO–gauge(16.5)**	Millimetres ..	1.00	2.50	0.61	4.00	1.00	0.75	0.70	—
C	**OO–gauge(16.5)**									
D	**EM–gauge(18.0)**	Inches ..	0.039	0.098	0.024	0.157	0.039	0.030	0.028	—
D_1	**EMF–gauge(18.0)**									
F	**O–gauge(32.0)**	Millimetres ..	2.38*	5.00	1.00	7.00	2.18	1.50	1.40	0.40
		Inches ..	0.094*	0.197	0.039	0.276	0.087	0.059	0.055	0.016
			*3/32 inch.							
F_1	**OF–gauge(32.0)**	Millimetres ..	1.50	3.50	0.80*	7.00	1.50	1.16	0.76	0.20
		Inches ..	0.059	0.138	0.031*	0.276	0.059	0.046	0.030	0.008
			*1/32 inch.							
G	**1–gauge(45.0)**	As reference F (o–gauge)								

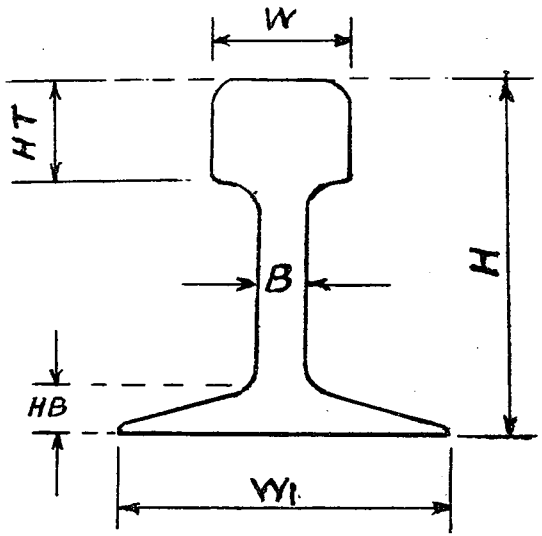

RAIL SECTION

(FLAT BOTTOM)

Ref. letter			H	W	W_1	B	HB	HT
B **HO–gauge(16.5)** C **OO–gauge(16.5)** D **EM–gauge(18.0)** D_1 **EMF–gauge(18.0)**	Millimetres	..	2.25	1.00	2.25	0.70	0.50	0.70
	Inches	..	0.089	0.039	0.089	0.028	0.020	0.028
F **O–gauge(32.0)**	Millimetres	..	5.35	2.50	3.80	1.00	1.20	2.00
	Inches	..	0.211	0.098	0.150	0.039	0.047	0.079
F_1 **OF–gauge(32.0)**	Millimetres	..	3.90	1.55	3.50	0.70	1.00	1.25
	Inches	..	0.154	0.061	0.138	0.028	0.039	0.049
G **1–gauge(45.0)**	Millimetres	..	5.50	2.50	5.00	1.00	1.00	1.50
	Inches	..	0.216	0.098	0.197	0.039	0.039	0.059

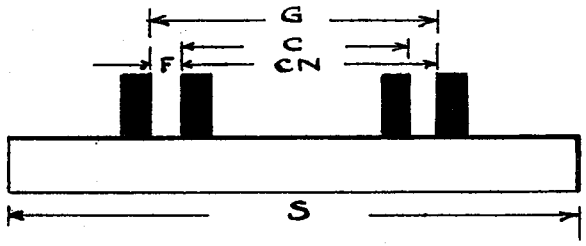

TRACK

Ref. letter		C maximum	F minimum	G minimum	S	CN minimum	Sleeper Width
B **HO–gauge(16.5)**	Millimetres ..	14.50	1.0	16.50	32.00	15.50	3.50
	Inches ..	0.571	0.039	0.650	1.260	0.611	0.138
C **OO–gauge(16.5)**	Millimetres ..	14.00	1.25	16.50	32.00	15.00	3.50
	Inches ..	0.552	0.049	0.650	1.260	0.591	0.138
D **EM–gauge(18.0)**	Millimetres ..	15.50	1.25	18.00	36.00	16.50	3.50
	Inches ..	0.611	0.049	0.709	1.417	0.650	0.138
D_1 **EMF–gauge(18.0)**	Millimetres ..	16.00	1.00	18.00	36.00	17.00	3.50
	Inches ..	0.630	0.039	0.709	1.417	0.670	0.138
F **O–gauge(32.0)**	Millimetres ..	27.00	2.50	32.00	76.20	29.50	9.50
	Inches ..	1.062	0.098	1.260	3.000	1.161	0.375
F_1 **OF–gauge(32.0)**	Millimetres ..	28.50	1.75†	32.00	63.00	30.00	6.00*
	Inches ..	1.117	0.069	1.260	2.480	1.181	0.236

*7 mm. for crossing timbers. †Increase to 2.25 on curves under 4ft. 0in. radius.

G **1–gauge(45.0)**	Millimetres ..	40.50	2.25	45.00	90.00	42.75	9.50*
	Inches ..	1.525	0.089	1.772	3.543	1.683	0.374

*12.70 mm. for crossing timbers.

SIX-FOOT WAY BUFFERS CONDUCTOR RAILS

Ref. letter			Buffer centre	Buffer height	OUTSIDE THIRD RAIL Height above running rail	OUTSIDE THIRD RAIL Distance from running rail*
B	**HO–gauge(16.5)**	Millimetres ..	19.80	12.20	1.50	4.00
		Inches ..	0.780	0.480	0.059	0.160
C	**OO–gauge(16.5)**	Millimetres ..	22.60	14.00	1.50	5.00
		Inches ..	0.890	0.551	0.059	0.197
D	**EM–gauge(18.0)**	Millimetres ..	22.60	14.00	1.50	5.00
		Inches ..	0.890	0.551	0.059	0.197
D_1	**EMF–gauge(18.0)**	Millimetres ..	22.60	14.00	1.50	5.00
		Inches ..	0.890	0.551	0.059	0.197
F	**O–gauge(32.0)**	Millimetres ..	39.30	24.20	2.00	9.00
		Inches ..	1.547	0.953	0.079	0.354
F_1	**OF–gauge(32.0)**	Millimetres ..	39.30	24.20	2.00	9.00
		Inches ..	1.547	0.953	0.079	0.354
G	**1–gauge(45.0)**	Millimetres ..	57.00	35.00	3.00	14.00
		Inches ..	2.244	1.378	0.119	0.551

*Measured from the inside face of running rail to the centre of conductor rail.

SIX-FOOT WAY (Minimum Clearances)

Ref. letter		B	C	D	D_1	F	F_1	G
GAUGE		(HO–16.5)	(OO–16.5)	(EM–18.0)	(EMF–18.0)	(O–32.0)	(OF–32.0)	(I–45.0)
Centre to Centre, Straight Running Roads	Millimetres ..	40.00	50.00	45.00	45.00	90.00	80.00	115.00
	Inches ..	1.575	1.970	1.772	1.772	3.543	3.150	4.527
Centre to Centre Sidings	Millimetres ..	50.00	50.00	50.00	50.00	110.00	90.00	120.00
	Inches ..	1.970	1.970	1.970	1.970	4.331	3.543	4.724

WHEELS

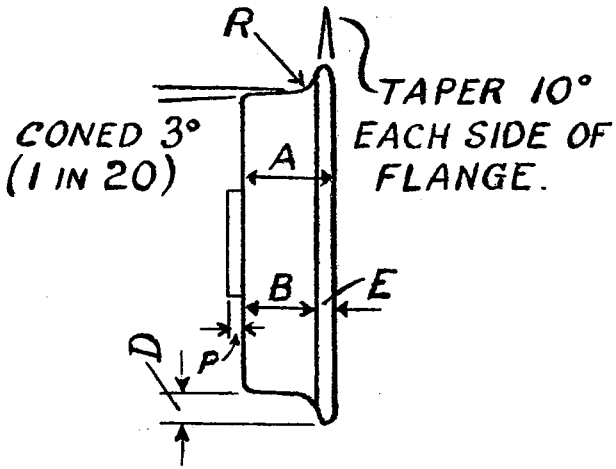

LIMITS

Column A : + .002, −0 in gauges B, C, D and D_1
+ .005, −0 in gauges F, F_1 and G

Column D : − .005, + 0 in all gauges.

Column E : − .002, + 0 in gauges B, C D and D_1
− .005, + 0 in gauges F, F_1 and G

Ref. letter			A	B	D	E	P	R
B	**HO–gauge(16.5)**	Millimetres ..	2.00	1.50	0.75	0.50	0.25	0.50
		Inches ..	0.079	0.059	0.030	0.020	0.010	0.020
C	**OO–gauge(16.5)**	Millimetres ..	2.50	2.00	1.00	0.50	0.25	0.50
		Inches ..	0.098	0.079	0.039	0.020	0.010	0.020
D	**EM–gauge(18.0)**	Millimetres ..	2.50	2.00	1.00	0.50	0.25	0.50
		Inches ..	0.098	0.079	0.039	0.020	0.010	0.020
D_1	**EMF–gauge(18.0)**	Millimetres ..	2.00	1.50	0.75*	0.50	0.25	0.50
		Inches ..	0.079	0.059	0.030	0.020	0.010	0.020
			*(sprung).					
F	**O–gauge(32.0)**	Millimetres ..	5.00	3.50	1.50	1.50	0.50	0.50
		Inches ..	0.197	0.138	0.059	0.059	0.020	0.020
F_1	**OF–gauge(32.0)**	Millimetres ..	3.75	2.75	1.25	1.00	0.50	0.50
		Inches ..	0.148	0.108	0.049	0.039	0.020	0.020
G	**1–gauge(45.0)**	Millimetres ..	5.00	3.75	2.00*	1.25	0.50	0.50
		Inches ..	0.197	0.148	0.079	0.049	0.020	0.020
			*1.50 (sprung).					

WHEELS AND AXLES

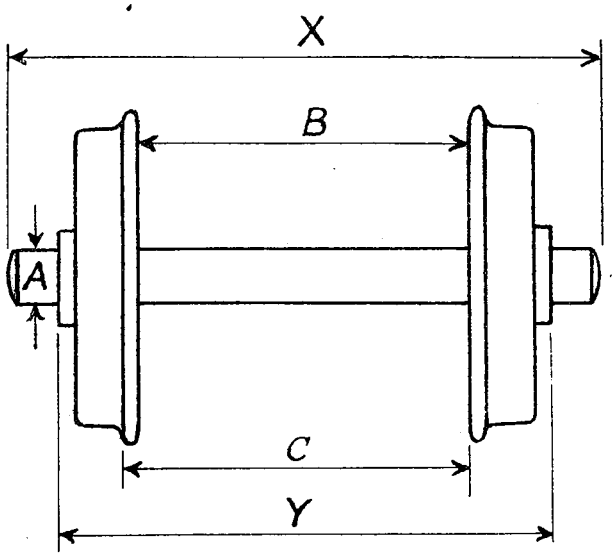

LIMITS
Columns B and X : + .005 in gauges B, C, D and D_1
+ .010 in gauges F, F_1 and G

Ref. letter			A	B	C	X	Y
B	**HO–gauge(16.5)**	Millimetres ..	1.83*	15.00	15.50	24.00	19.50
		Inches ..	0.072*	0.591	0.611	0.945	0.768
C	**OO–gauge(16.5)**	Millimetres ..	1.83*	14.50	15.00	27.00	20.00
		Inches ..	0.072*	0.571	0.591	1.063	0.787
D	**EM–gauge(18.0)**	Millimetres ..	1.83*	16.00	16.50	27.00	21.50
		Inches ..	0.072*	0.630	0.650	1.063	0.847
D_1	**EMF–gauge(18.0)**	Millimetres ..	1.83*	16.50	17.00	27.00	21.00
		Inches ..	0.072*	0.650	0.670	1.063	0.827
F	**O–gauge(32.0)**	Millimetres ..	2.38†	28.00	29.50	48.00	39.00
		Inches ..	0.094†	1.102	1.161	1.890	1.535
F_1	**OF–gauge(32.0)**	Millimetres ..	2.38†	29.00	30.00	45.00	37.50
		Inches ..	0.094†	1.142	1.181	1.772	1.476
G	**1–gauge(45.0)**	Millimetres ..	3.18‡	41.50	42.75	62.00	52.50
		Inches ..	0.125‡	1.634	1.683	2.440	2.067

*15 S.W.G. †3/32 inch. ‡ $\frac{1}{8}$ inch.

FUNDAMENTAL TRACK AND WHEEL RELATIONSHIPS

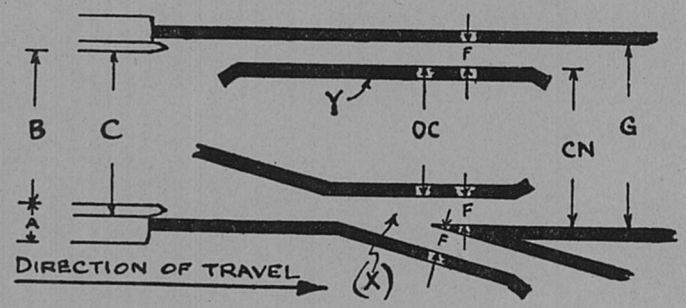

A pair of wheels travelling on track as shown is normally held on its course by the flanges. Where there is a crossing there is a potentially dangerous gap in one rail, as shown at (*x*) in the diagram, which may be liable to deflect the flange of the lower wheel downwards. It is thus necessary to restrain the wheels by installing a check-rail as shown at *y*, acting on the inside of the flange of the upper wheel.

For this check-rail to be effective it must be located so that the dimension marked *CN* is at least equal to that shown as *C* on the wheels. It may be more, but not less.

In the foregoing tables, the minimum permissible value of *CN* is specified on page 5 for each gauge, and this will be found equal in all cases to the maximum value of *C* for the same gauge as specified on page 8, irrespective of whether it is the actual sum of its components or not. It should be noted that where, on sharp radius curves, it is found advisable to give additional clearance for the wheel flanges, the specified value of *CN* must be maintained, the flangeways and gauge being increased as required.

In addition to the above, the presence of the other rail of the crossing, shown dotted in the diagram, has to be considered. This merely requires that the distance between the backs of the wheel flanges, *B* in the diagram, is greater than the distance over the check and wing rails (*OC*) by a working clearance, sufficient to allow free running and the slight angularity of the wheels due to sideplay. It is thus necessary to specify limiting values for these dimensions, and these will be found in the tables. It is usual practice, though not essential, to make all flangeways equal, as shown at *F* on the diagram and page 5 of the tables.

To ensure adequate support for the wheel when passing over the crossing gap, the tread must be wide enough to be supported by the wing-rail when it runs onto the crossing nose. To cover the worst case, i.e. when the back of the flange is touching the dotted wing-rail, the total width of the wheel, dimension *A* on page 7, must be greater than twice the flangeway *F*.