Class 44/45/46 'Peak' locomotive

Replacement Parts

1	650-036 motor
2	650-038 PCB 21pin
3	650-039 driveshaft
4	650-032 underframe
5	650-011 bogie tower top
6	650-032 driving wheels
7	650-022 bogie
8	BL2007 drive cup
9	650-030 bogie frame
10	BL1999 coupling
11	650-016 motor bracket
12	650-005 buffer beam pack

When ordering parts please quote the catalogue number together with the livery of the model (if appropriate) and number of the part required.

Parts are subject to availability.

Packets of couplers (item 36-030) suitable for this model are available from retailers

Bachmann Europe Plc
Moat Way
Barwell
Leicestershire
LE9 8EY
01455 841756
www.bachmann.co.uk

The model should be handled carefully as it has many finely detailed parts. It is not suitable for persons under 14 years.

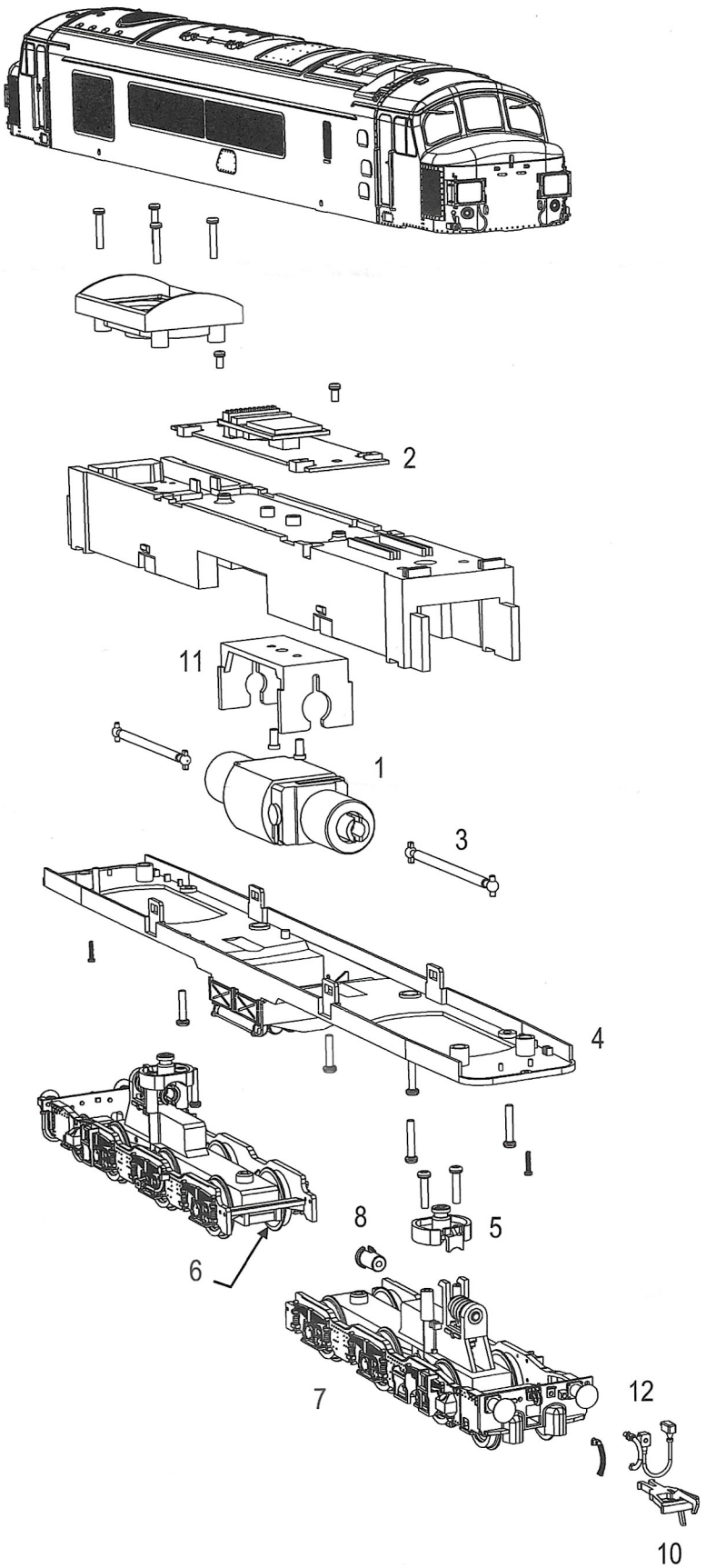

A DCC Sound fitted loco is shown. When fitting a sound decoder to a DC model, fit the speaker box in the cavity where shown.

E3265-IS002
REV1 04/09