CONNOISSEUR MODELS

0 Gauge Locomotive Kit

LNER Class G5 0-4-4 Tank

Prototype. This class of 110 locomotives was built from 1894. They were the standard design of passenger tank until 1907. In later years members of the class wandered southwards. They worked on outer London suburban services and East Anglia branch lines. The class lasted until 1958.

Kit. The body is etched in brass with nickel silver being used for the chassis. The bogie is sprung and compensated. Slide bars and valve gear are represented between the frames. Cab interior is detailed and a cast back head is provided. Alternative components for bunker, buffer beams and other later changes made to some locomotives are provided. Etched fire irons and a choice of number plates are included.

This kit has been designed to provide a set of quality components, that will allow the modeller who has basic kit building skills to build an 0 gauge model of the prototype, to a standard of detail that is suitable for operating models on most 0 gauge layouts.

Parts Required To Complete

2 Sets 3'1", 12 Spoke Bogie Wheels (Slater's Catalogue Number 7837NE)
2 Sets 5'1$^{1}/_{2}$", 16 Spoke Driving Wheels (Slater's Catalogue Numbers 7861)
Plunger Pickups if desired (Slater's Catalogue Number 7157)
Handrail Knobs if desired as a replacement for split pins (Slater's Catalogue Numbers, Long-7951, Short-7952)
Available From Slater's Plastikard, Old Road, Darley Dale, Matlock Derbyshire, DE4 2ER, Telephone 01629 734053.
Mashima 1833 Motor and 40/1 Gear Set.

Connoisseur Models, 1 Newton Cottages, Nr Weobley, Herefordshire, HR4 8QX, Telephone 01544 318263

GENERAL INSTRUCTIONS

Please read this section carefully especially if this is your first etched brass kit. Many modellers fight shy of working in this medium but the basic skills are relatively easy to acquire. Once you've learned how to form and solder brass you'll find all kinds of modelling possibilities will open up for you.

Assembling an etched kit involves exactly the same skills that a scratchbuilder uses – the only difference is that the cutting out of the parts is already done for you. Some filing and trimming will be necessary from time to time. Where this is the case I have highlighted it in the instructions.

The main skill to master is soldering and I would recommend a Weller 40 Watt soldering iron. This has a 6mm diameter removable copper bit. The bit is shaped like a screwdriver and has a bright coating of solder (tinned). This combination of iron and bit shape is ideal for running fillet joints and has a good reserve of heat that is so necessary for soldering small parts onto large components. Note the shape and condition of a new bit as this won't last long and will need restoring back to this condition.

It is important to keep the bit clean and in good condition as you work. Get a soldering iron stand containing a damp sponge as old oxidized solder is wiped off on this before picking up fresh solder for each joint. If you haven't made a joint for some time you may find that a hard black crust has formed on the bit. Remove this with a brass wire brush (suede brush) and then feed some multicore solder onto each side of the bit to restore a bright surface (referred to as wetting or tinning the bit). After about 8 hours use you will find the bit is in poor condition with holes and a ragged edge. File the bit back to its original shape using a hand bastard file and then polish the surfaces on emery cloth. Coat the bit with Fluxite Soldering Paste (traditionally used by plumbers) and this will prevent the bare copper oxidizing as the iron heats up. Then feed multicore solder onto the bit to form a generous coating and leave to bubble away for a couple of minutes before wiping the excess off to give a bit almost as good as new.

A smaller Antex 25 Watt iron with a 3.2mm screwdriver bit is very useful for small assemblies and detail work such as handrails, but will have insufficient heat reserve for main assembly work. The Antex has a plated iron bit and after a little use with 145° solder a grey oxide appears on the bit that will prevent you from picking up the solder. Touch the bit to some multicore solder and it will flash over the bit wetting it so that you can continue picking up 145° solder. I have found no problems with mixing the two solders in this way.

I use 145° solder for virtually all assembly work. I prefer it in wire form, available from many tool merchants, but it is also produced in stick form by Carrs. I find that its lower working temperature helps to give a quick clean joint and limits the build up of heat which may cause distortion in components. I find that I can hold parts together with my finger ends and make a joint before heat reaches my fingers or other etched parts drop off.

I use 60/40 tin/lead fluxed multicore electrical solder (melting point about 190°) mainly to keep the iron bits in good condition. As it gives a slightly stronger joint than 145° I sometimes use it for small spot joints on handrail wire, lamp brackets etc, but still use extra liquid flux.

For all brass and nickel silver work I use Carrs green label liquid flux. You will soon get the feel for how much to use but more problems are caused by too little flux than too much.

Before soldering components together thoroughly clean both surfaces along the join line with a glass fibre burnishing brush. Using your tweezers or a knife blade etc, hold the parts together in the correct position and with an old paintbrush run some flux along the area to be joined. Still keeping the parts correctly aligned, pick up a small quantity of solder on the tip of your iron and carry it to the joint (unlike electrical soldering when you feed solder into the joint). Hold the iron against the joint just long enough for the solder to flash between the parts. Don't let go of the parts until the solder has cooled – this takes from five to ten seconds. To run a fillet of solder along a joint, wait until the solder flashes between the parts and then pull the molten solder along the joint with the iron tip. Don't load the iron tip with a lot of extra solder work the joint in 1" lengths bringing in small quantities of solder.

Brass is a very forgiving material and if you get something out of alignment use heat from the iron to desolder the joint before starting again. For complicated assemblies it is a good idea to only tack solder parts together. You can then make adjustments by desoldering until you are happy with the location of parts and then solder solid.

When you need to laminate two or more layers of brass together align the parts then carefully clamp them together either in the vice or by holding them with miniature crocodile clips. Run flux around the edges and then go around with the soldering iron. Clean up thoroughly afterwards.

To fit small parts and overlays on to a larger assembly, such as strapping to a wagon side, when you need to prevent finely detailed areas such as planking becoming clogged up with solder tin the back of the small component first, then hold in place on the model and apply flux. Carefully wipe the tip of your iron on a sponge to remove any solder from it (dry iron), and then touch it against the parts to be joined. After a few seconds you'll see molten solder bubbling from the edges. Still holding the parts in place remove the iron and allow the joint to cool. An alternative is to use solder paint (I would recommend Carrs 188 solder paste). As the name suggests this is a flux and solder in one. Simply apply a thin coat of solder paint to the back of the component instead of tinning. Still apply a small amount of liquid flux before you solder the part into place.

Any surplus solder should be removed using a craft knife, I find No 10 curved scalpel blades ideal, then burnish clean with a glass fibre brush. With practice you'll learn how to use the minimum amount of solder to do the job. Flux is corrosive so after each soldering session give your model a good scrub with washing up liquid or Jif. After a day or two any remaining flux residues will show as a green film which should be washed away.

To cut parts from the fret use a sharp Stanley knife on a piece of hardboard or a pointed scalpel blade on a block of softwood. Remove tags and burrs with a fine file.

Three-dimensional parts are formed by folding. On an etched brass kit the fold lines are normally half-etched on the inside of the fold. You'll be able to fold most parts using smooth-jawed pliers. For longer parts folding bars are desirable.

Other useful tools include a bench vice, a good pair of tweezers, a set of Swiss files (get a full set of cheap ones and then buy quality replacements for the three that you use the most), a pin vice with a selection of drills from 0.5mm to 2.1mm plus a few larger sizes that you use regularly (2.6mm for axle bearings etc), some square-nosed pliers and some very pointed-nosed ones, preferably with smooth jaws. Buy cheap tools first and duplicate the most used ones with quality.

Try to complete all high-temperature soldering before attaching any of the cast whitemetal parts. These can be attached with two-part epoxy resin such as Araldite Rapid. Ensure the surfaces to be glued are clean and free of grease.

A better alternative is to solder your white metal castings using Carrs 70 degree low melt solder and Carrs red label white metal flux. The iron should be run at a much lower heat so that you do not melt the castings. I have a domestic light dimmer switch and plug socket fixed to a piece of wood, wired up with a lead and standard mains plug fused at 3 amps to the input side of the dimmer switch and the output of the dimmer switch into the plug socket (remember to continue the earth). Plug your 40 Watt iron (25 Watt iron won't work) with a clean and freshly tinned bit into this and experiment with adjusting the switch until you find the range of temperature at which the solder melts but a scrap casting does not. **Note** as the iron is running at a lower voltage it will take longer to heat up, so when you think the adjustment is correct do check a few minutes later on another scrap casting to see that it doesn't melt. Then scribe a mark on the switch knob to indicate this position.

When attaching white metal fittings to brass the surface of the brass must be tinned with 145° solder to allow the solder to grip. The surface of the casting at the joint should be burnished bright. The casting can then be soldered into place with 70° solder and fillets of solder run into any gaps with no risk of melting the casting. Virtually all castings will be improved by a little extra fettling work. Flash can be cleaned out using a sharp pointed knife blade, part lines removed by scraping back with a curved blade and then blending in using a fibreglass brush. The casting moulds tend to distort when metal flows in so check castings for square and even thickness.

SPECIFIC INSTRUCTIONS FOR LOCOMOTIVE KITS

Hole Sizes. Because of the etching process holes will normally be found undersize, for example the turned brass bearings will not fit holes in chassis sides, and a simple fitting operation is required. The best tool for opening up holes of this size is a cheap tapered reamer available at most model railway shows from tool suppliers. By rotating this gently in the hole you quickly open holes to correct size, without risk of tearing the metal. By trial and error on the first hole you will soon establish how much material requires removal. For smaller holes, such as those for the location of casting's etc these are best opened up using a set of cheap tapered broaches, or by twisting a small round file in the hole.

BRC250 6 Piece Cutting Broach Set 0.7-2mm
BRC300 12 Piece Cutting Broach Set 0.65-4mm

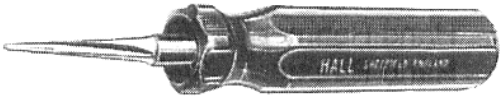

TR0005 Micro Drill Reamer 1mm-5mm

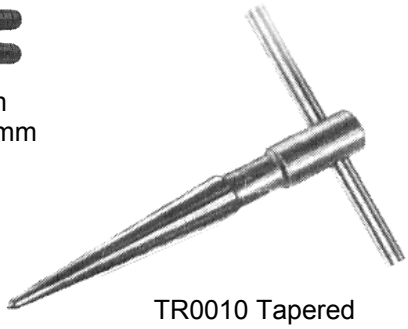

TR0010 Tapered Reamer 3mm-12mm

Three very useful tools purchased from SQUIRES, 100 London Road, Bognor Regis, West Sussex, PO21 1DD, Telephone 01243 842424.

Forming Parts. While the boiler in this kit is pre-formed, other forming is best achieved as construction progresses as this enables the parts to be adjusted to each other. To make a tight curve at full metal thickness, such as tank front, bunker rear etc, take a piece of rod slightly under size of the curve required (a drill shank is ideal). Place roughly on centre line of bend, holding in place with thumbs and pull upwards with fingers, forming approximately 30 degrees of the bend. Check with eye and adjust if necessary before forming 60 degree of bend then offer part to model. Final adjustment of fit is easily made on last stage of bending.

To form shallow curves, splasher tops, smoke box wrappers etc, use a piece of pipe or broom handle. Diameter is not crucial, a piece of one-inch water pipe covers cab roof to smoke box wrapper. Place part over tube and hold in place with finger and thumb of one hand. Work the metal in stages over tube with finger and thumb of the other hand until correct radius is formed.

A technique you may find useful in working metal is to soften and remove the spring from the metal by heating (called annealing). The part is held with pliers and heated in a gas flame. (The gas cooker is ideal). Alternatively use a pencil torch that runs off lighter fuel. Heat part until a purple band appears close to the edges and then remove from heat. Do not overheat part as it will then become too soft and unworkable. Remember you can reheat if not workable. Allow part to cool naturally in the air.

Damaged Parts and Shortages. If you damage an etching during construction it is not possible to replace individual pieces, but I am quite flexible in providing at minimum cost replacement frets (this will contain all the brass or N/S parts). Where a casting is damaged individual items can be replaced as I have full control of production. Because of the complexity of the product, combined with the low volume way it is produced, I try to exercise a high degree of quality control in production and packing but if you find you are short of an item or find a sub standard part please approach me for a replacement.

Fibreglass Scratch Brush. The scratch brush is like a propelling pencil holder into which a fibreglass refill is fitted and which will give a vigorous abrasive action. I find this tool indispensable for cleaning up and removing solder. One very useful tip is to soak the refills in dilute PVA glue (Evostick resin W wood glue let down 50/50 with water and a spot of washing up liquid) and then drill holes in a block of wood and stick the ends of the refills in the holes while they harden off. This will make the refills much more abrasive and longer lasting and also stops the fibres breaking off and ending up in your fingers. You will need to give the refill a good rub to get it started but if you use green label flux you will soon have plenty of rusty tools that need cleaning.

A fibreglass brush and most other general modelling tools can be obtained from Squires Model and Craft Tools, 100 London Rd, Bognor Regis, West Sussex, PO21 1DD, Tel 01243 842424. They do a free catalogue and a very good mail order service.

LNER 0-4-4 Tank Class G5 Parts Identification

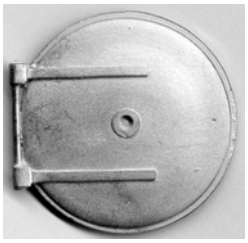
Smokebox Door X 1

Air Reservoir Tank X 1

Safety Valve Cover X 1

Dome X 1

Chimney X 1

Backhead X 1

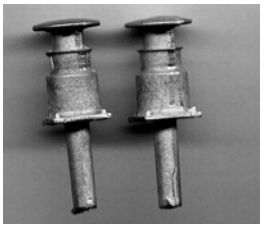
LNER Buffers X 4

NE Buffers X 4

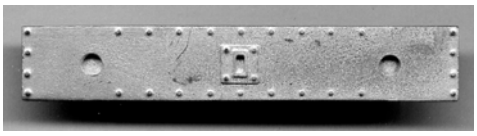
Bufferbeam X 2

Airbrake Cylinder X 1

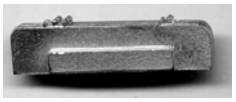
Backhead Spacer X 1

Coupling Centres X 2

Springs X 4

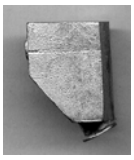
Sandboxes X 2

Valve Cover X 1

Safety Valves X 2

Brake Handle X 1

2 No Whistles Large & Small

Westinghouse Pump X 1

Smokebox Door Handle X 1

Rear Air Pipe X 1

Smokebox Door Wheel X 1

Track pins X 2

Water Filler Cap X 2

Front Sandbox Filler X 2

Twin Pipe Oil Box X 2

Front Air Pipe X 1

Steam Heat Pipe X 2

Smokebox Blower Valve X 1

Vacuum Pipe X 2

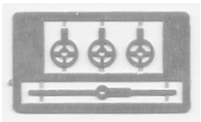
Regulator and hand wheel etch X 1

Selection of Wire and Rod

1.8mm dia Copper Rod X 6”
1.6mm dia Brass Rod X 3”
1.2mm dia Copper Rod X 6”
1.4mm dia Copper Rod X 12”
0.7mm dia Brass Wire 10” long X 4
0.9mm dia Brass Wire 10” long X 4
0.45mm dia Spring Brass Wire 10” long (for use as wire wiper pickups) X 2
1” small bore copper tube
20swg tinned copper wire 3 turns
22swg tinned copper wire 3 turns

Sundry Parts

Printed Circuit Board Strips For Use with Wire Wiper Pickups
Turned Brass Axle Bearings X 8
6BA Screws X 3
6BA Brass Nuts X 5
6BA Brass Washers X 2
8BA Brass Screws X 2
8BA Brass Nuts X 2
Split Pins for Handrail Supports X 12
Electrical Wire for Pickups.
1 X 18” Black 1X 18” Red

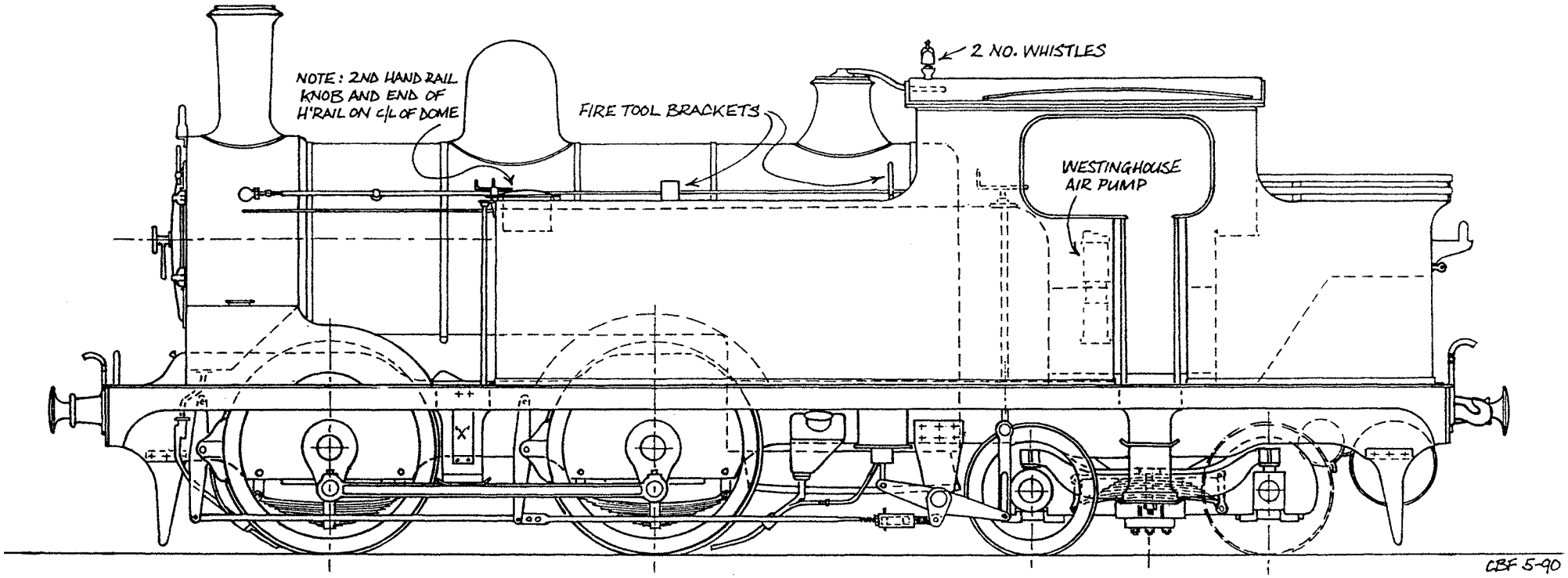

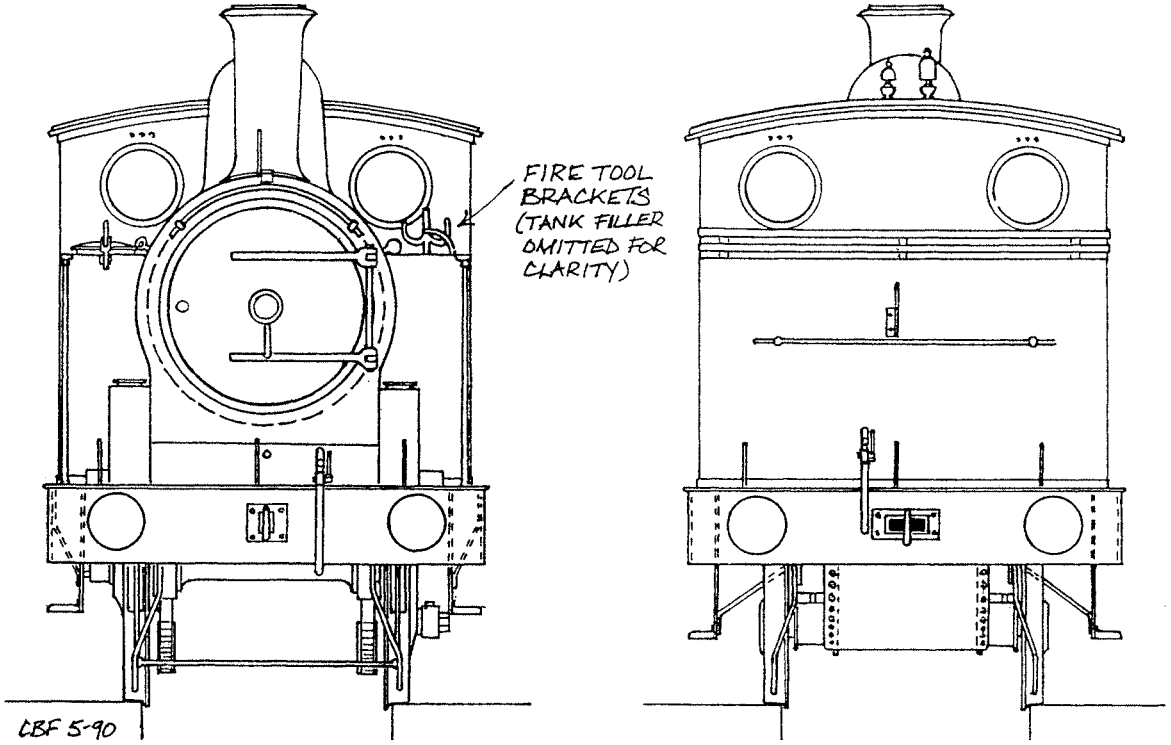

Drawing by Colin Foster

Drawing shows NER Class O & early LNER Class G5.

The kit has been designed to build a loco in this condition.

Drawings are only approximately to scale.

LNER and BR Class G5 0-4-4T
Drawing by Colin Foster

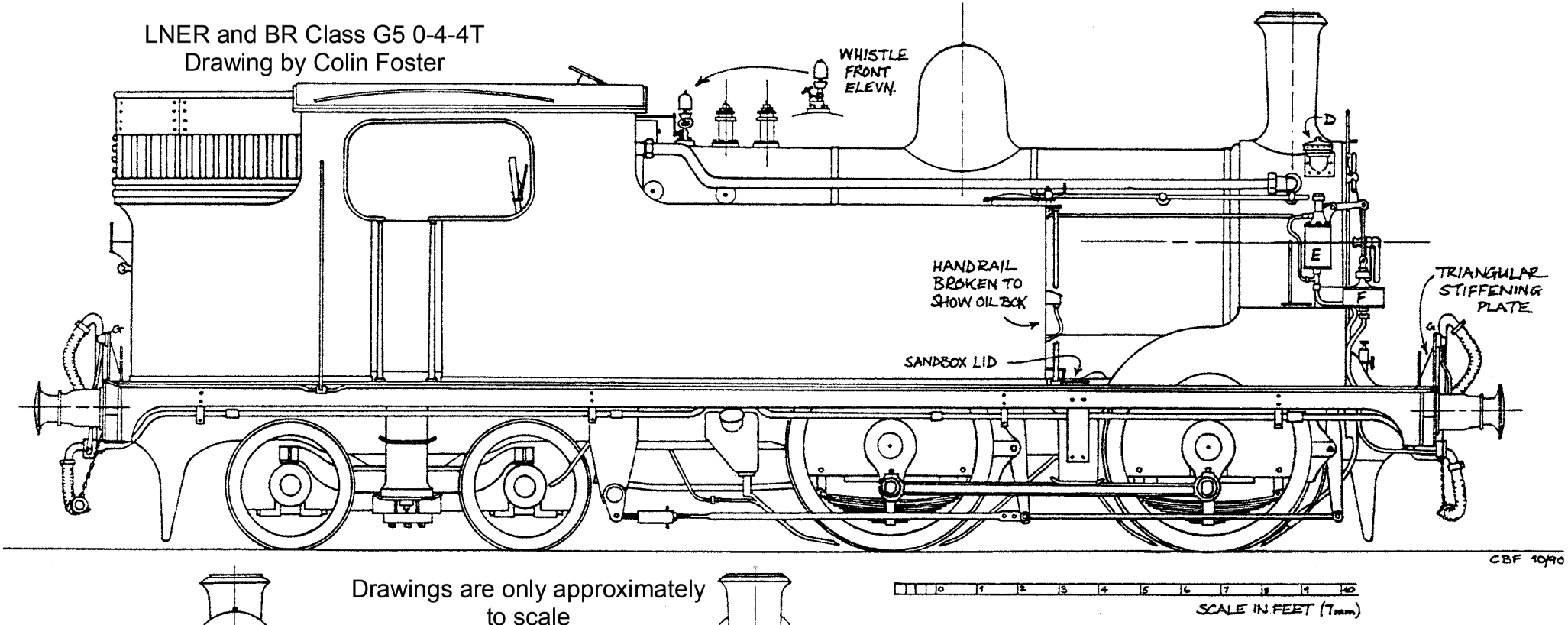

Drawings are only approximately to scale

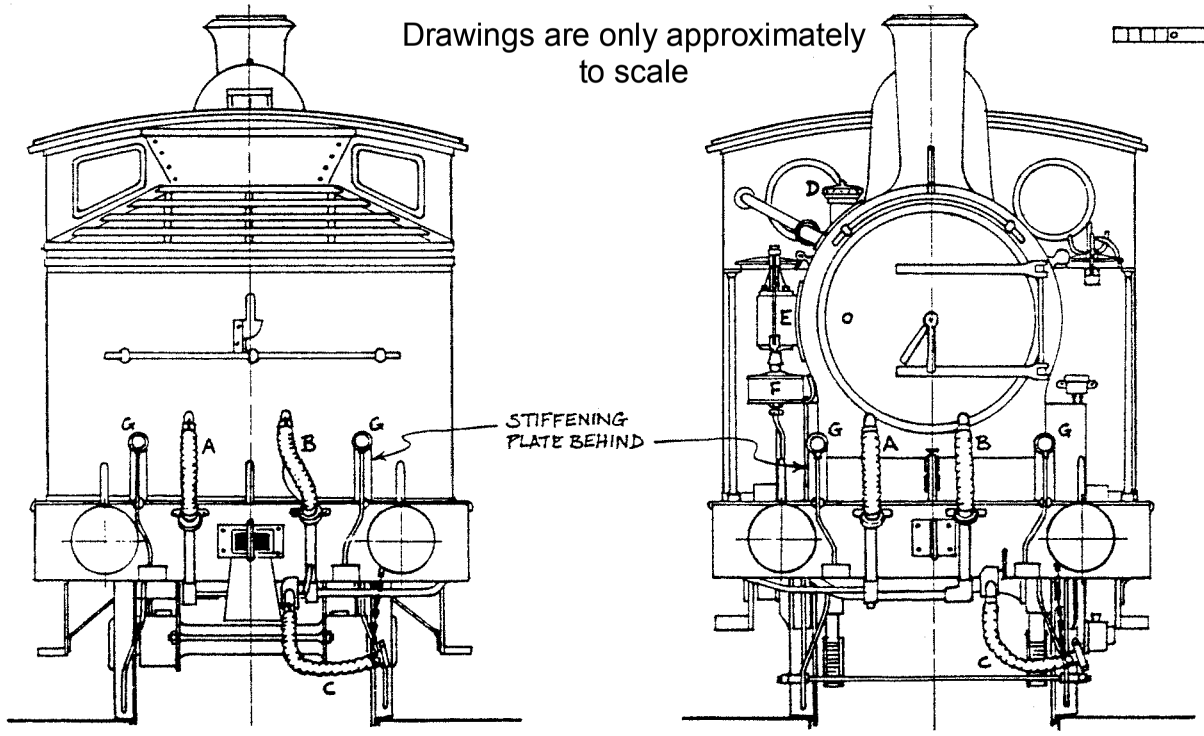

A - Regulator Pipe (paint red)
B - Vacuum Pipe (paint black)
C - Steam Heating Pipe
D - Anti Vacuum Valve
E - Vacuum Controlled Regulator
F - Vacuum Cylinder
G - Electric Bell Connectors

The drawing does not depict a particular loco but shows detail changes made to the class in later days. Note that individual locos would not have all the modifications. Alternative parts are not provided in the kit to cover all modifications.

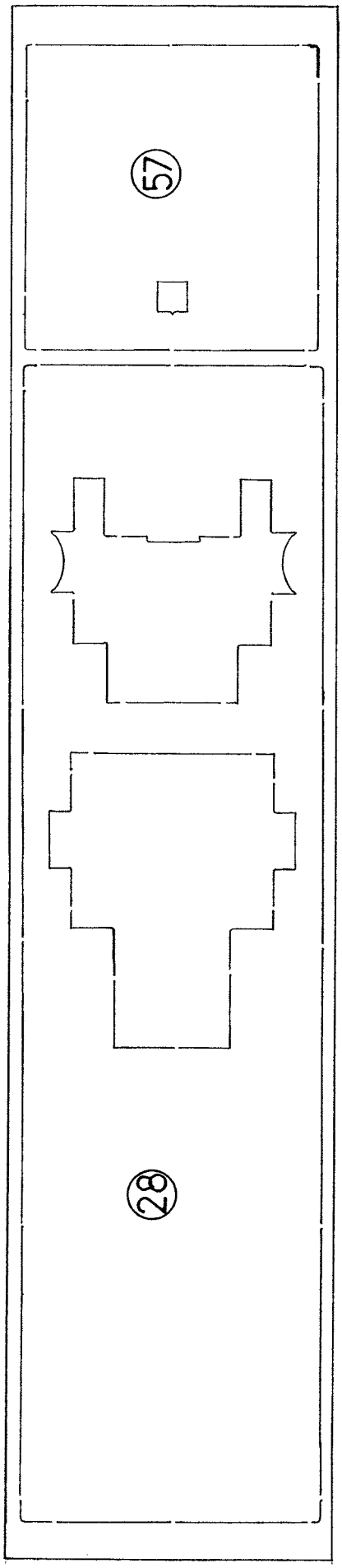
57
28

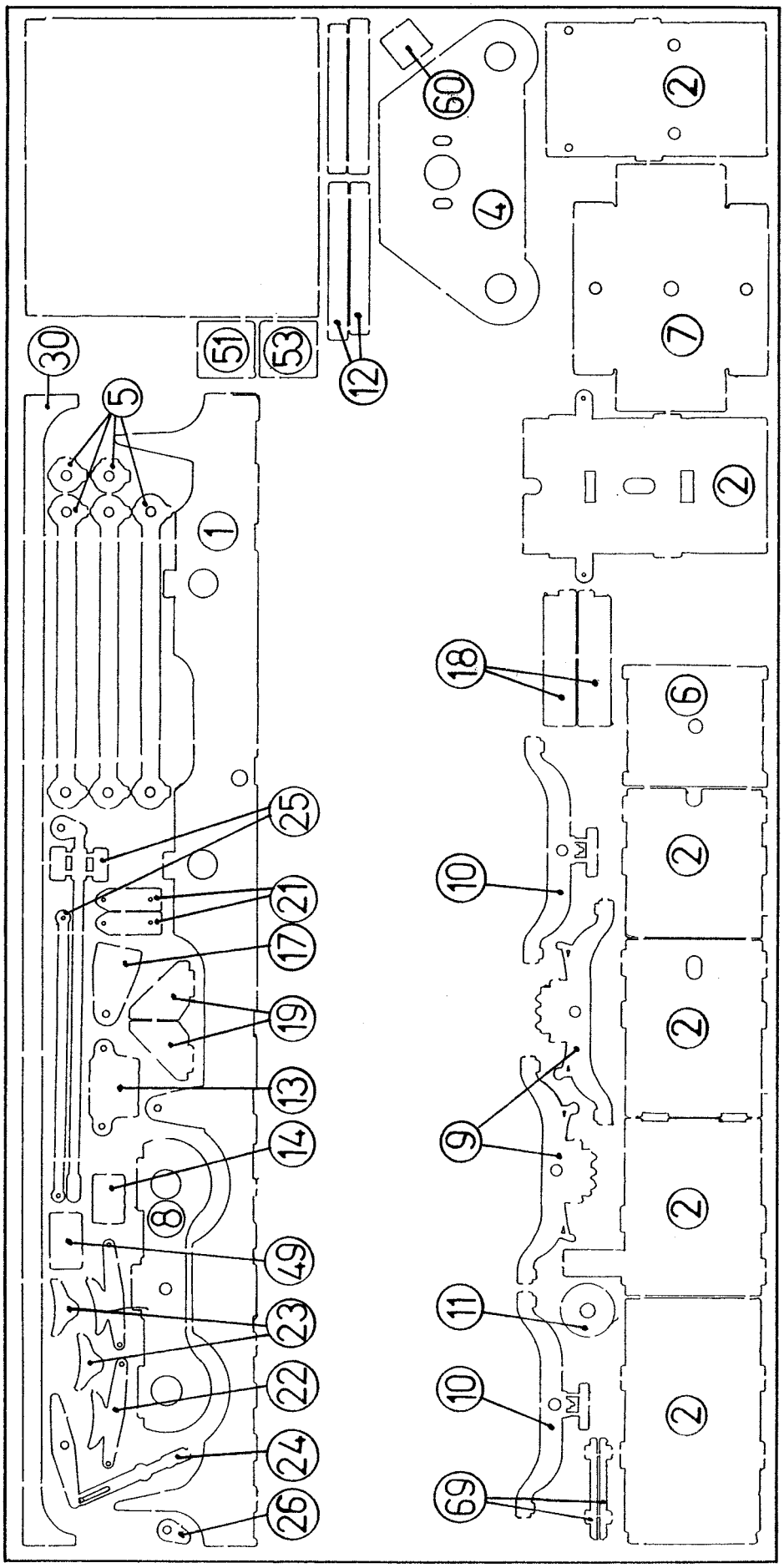
60
4
2
7
2
51
53
12
30
5
1
18
6
25
2
10
21
17
2
19
13
9
14
8
2
49
23
11
22
10
2
24
69
26

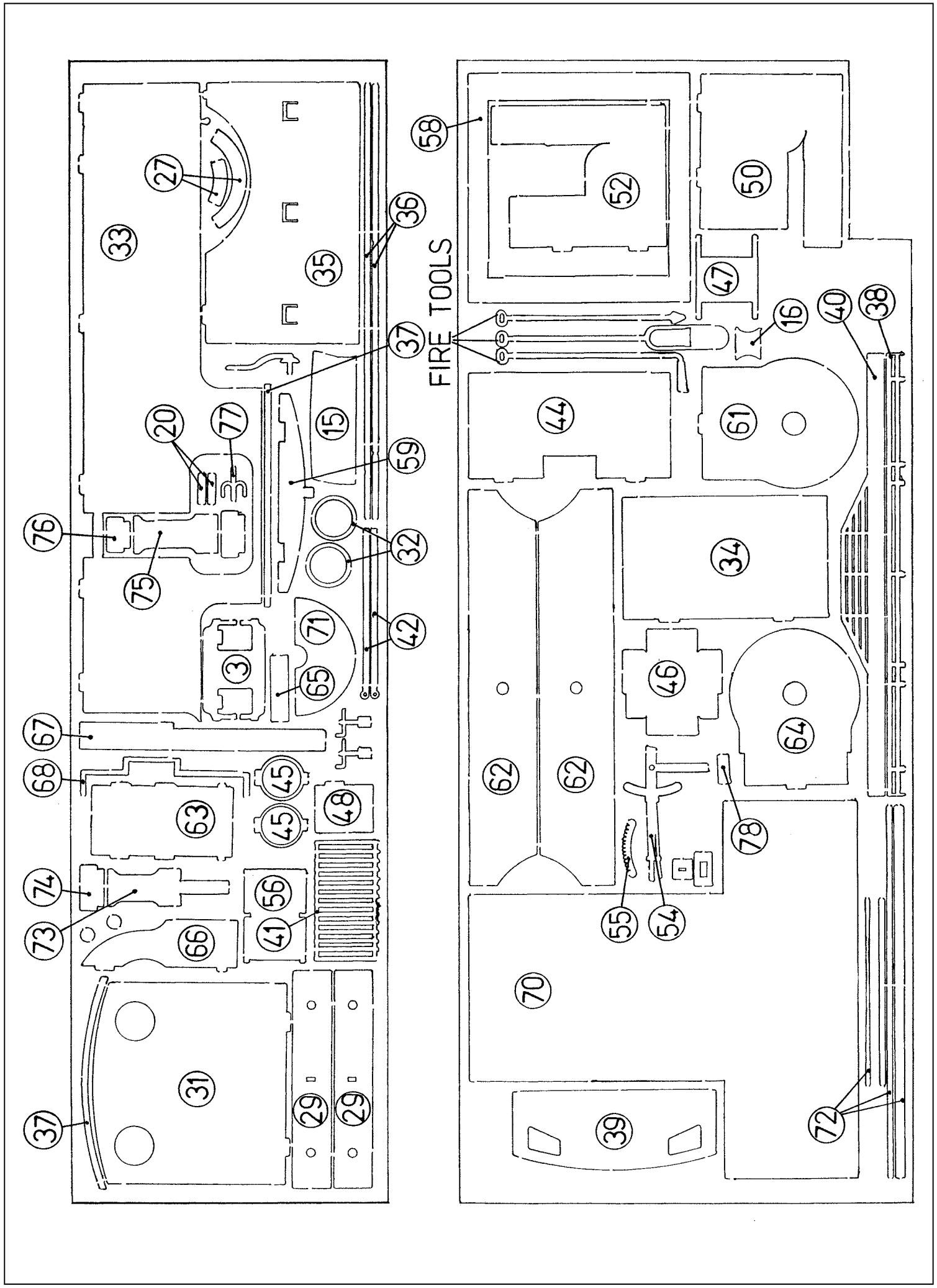
FIRE TOOLS
58
52
50
27
36
33
35
47
16
40
38
37
44
61
20
77
15
59
76
32
34
75
71
42
3
65
46
64
67
68
45
62
62
63
48
78
74
56
55
54
73
41
66
70
31
29
29
39
72
37

Main Chassis Construction

The first section of the instructions show full chassis construction, but in practice you can build a basic chassis and then use this to check body clearance. Then complete the assembly of the two parts together. Parts are numbered in a logical assembly order. Tack solder a part in place, then adjust the next part to match. Some parts are designed oversize to be trimmed to size. Solder solid when happy.

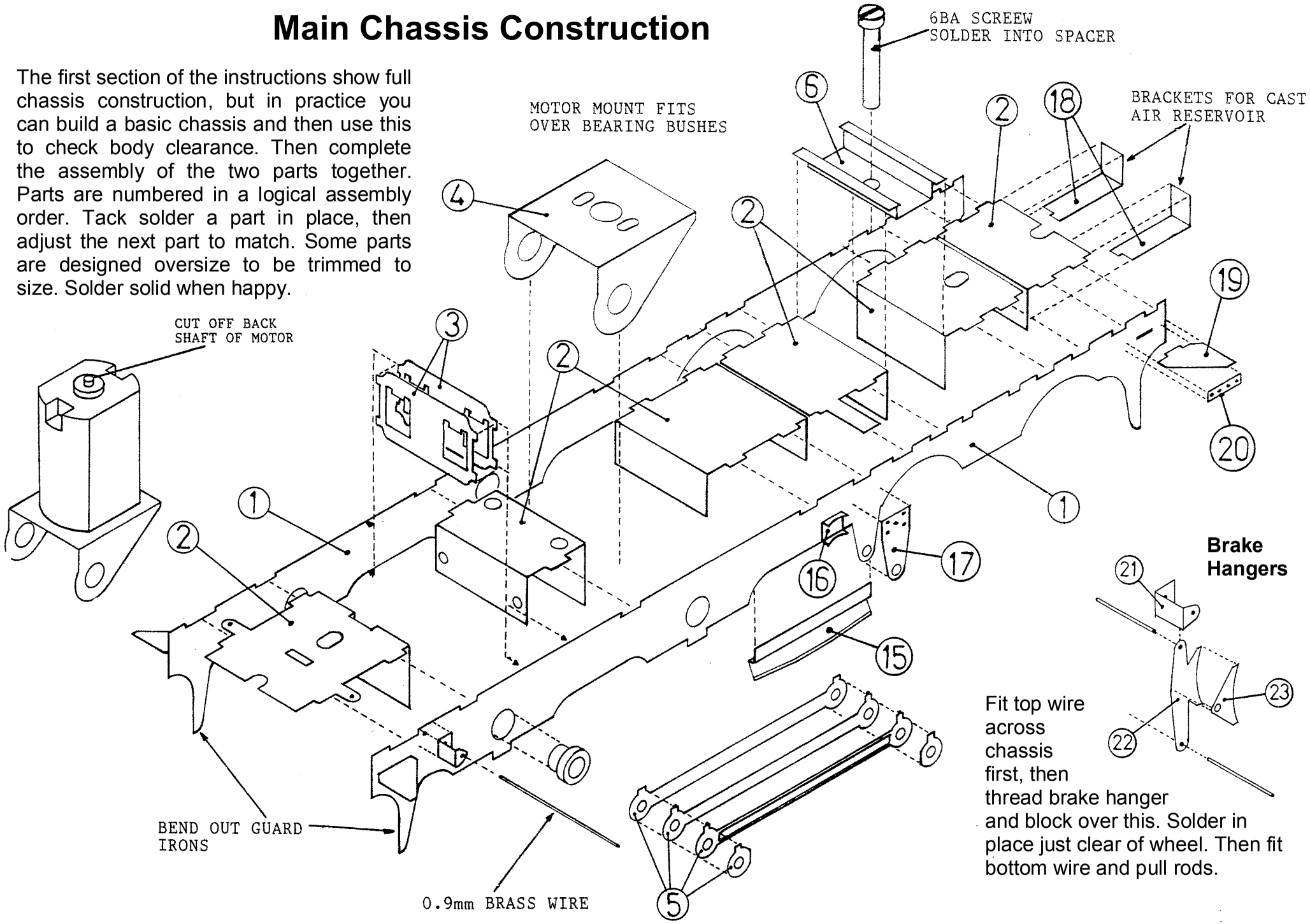

Inside Valve Gear

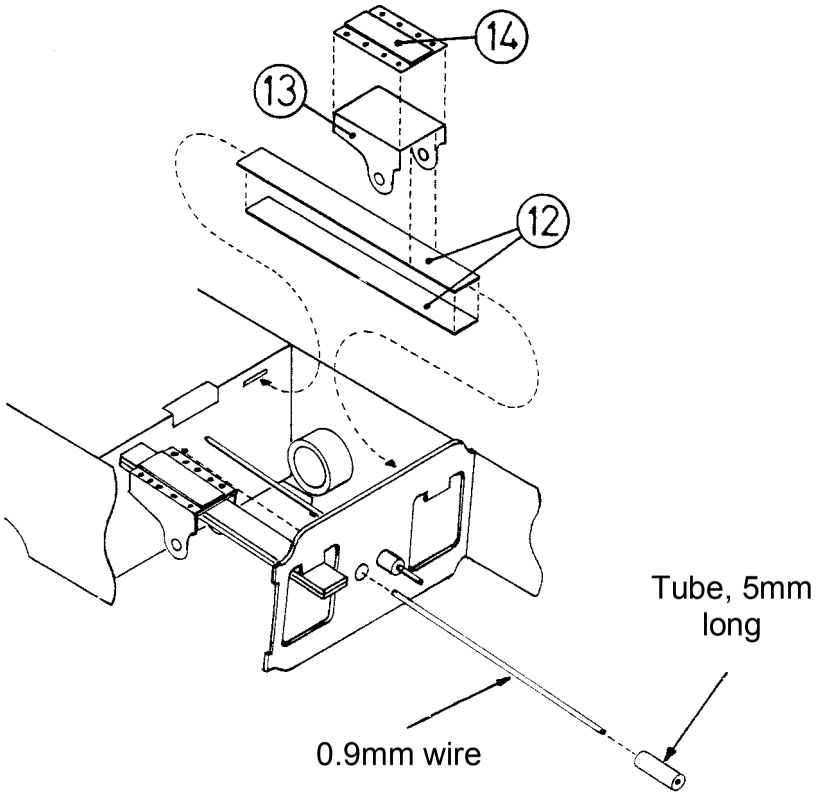

Bogie Construction

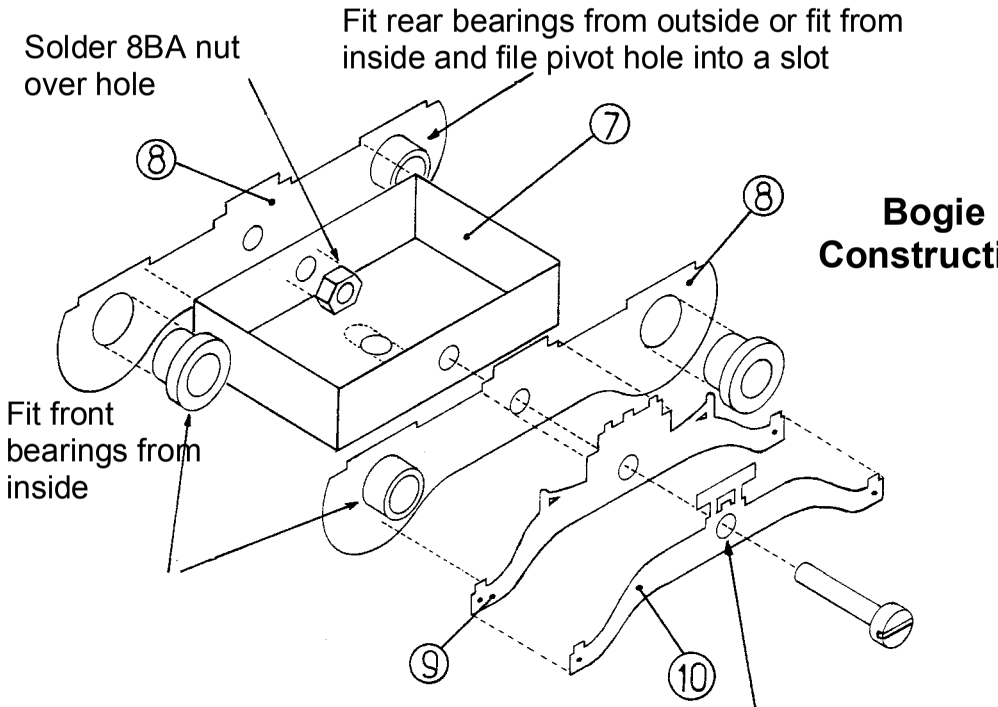

Solder parts 9 & 10 together. Then open hole out to clear 8BA screw head. Then solder to part 8.

Cross section of bogie mounting

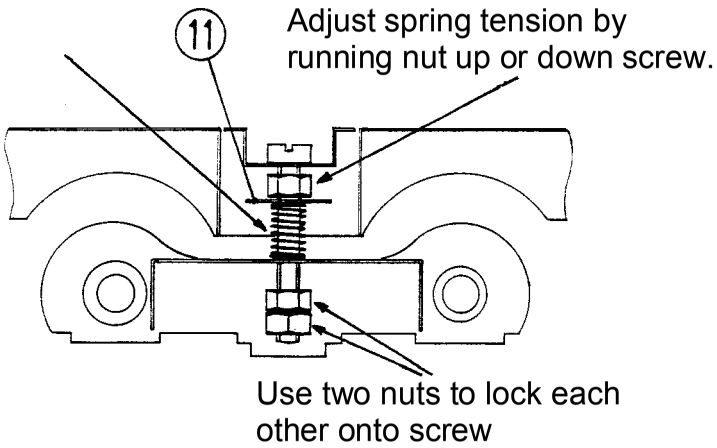

To build compensated bogie. Fit one sideframe to part 7, locking in place with screw. Make sure side frame is parallel with top and bottom of part 7, then tack solder to part 7.
Fit second sideframe, locking in place with screw, then back of the screw 1/4 turn. Solder screwhead into hole in part 10. The sideframe should then pivot on the screw thread. When happy with the running of the loco, file screwheads flush with part 10.

Brake Linkage

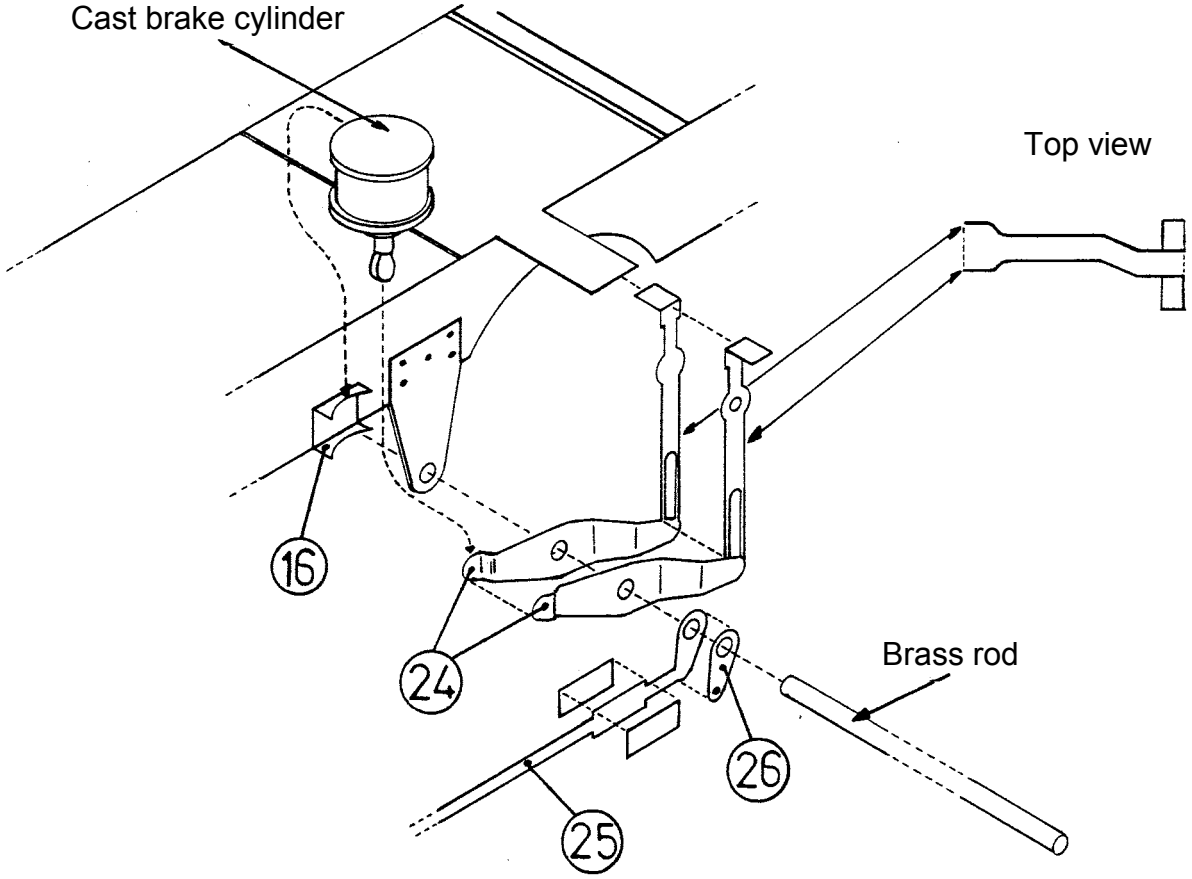

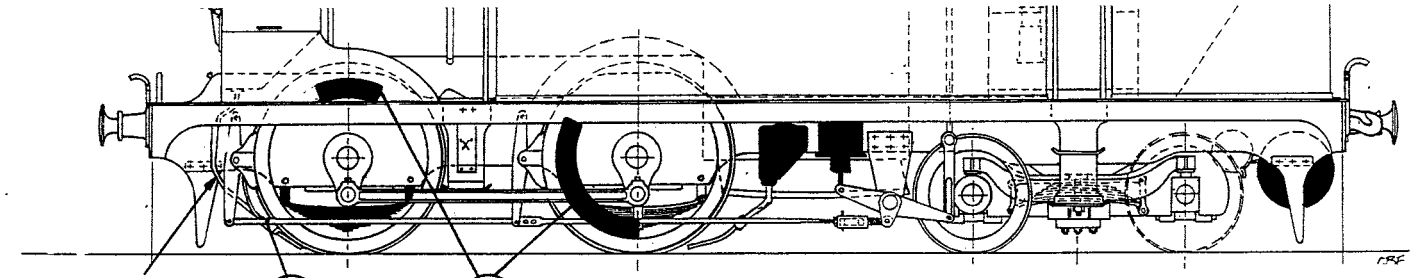

After painting the chassis fit electrical pickups and motor/gears and set up for sweet running.

I have included parts for making a wire wiper pickup system and pilot holes that can be opened up for Slater's plunger pickups are included on the side frames.

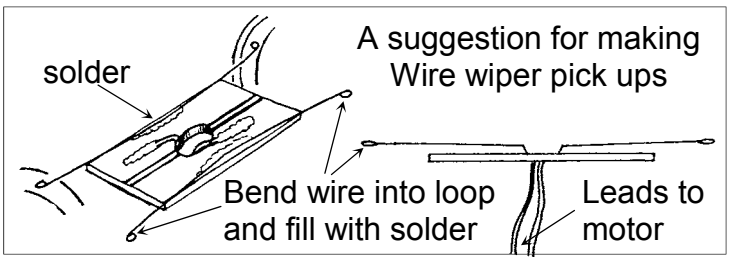

With these instructions I have assumed that you are experienced in setting up a chassis. If this is not the case extra instructions are included on the instruction sheet that comes with my motor and gearset. These can be downloaded free of charge from my website www.jimmcgeown.com or send a SAE and I will be pleased to provide them.

I have also produced comprehensive hints and tips help sheets for using Slater's wheels, plunger pickups, etc. These can also be downloaded free of charge from my website www.jimmcgeown.com or send a SAE and I will be pleased to provide a free copy of my hints and tips booklet for new customers.

Main Body Construction

38
31
37
31
32
34
36
37
33
35
Fold out tabs for boiler
Reinforce with solder
69
36
28
30
29

Alternative Part

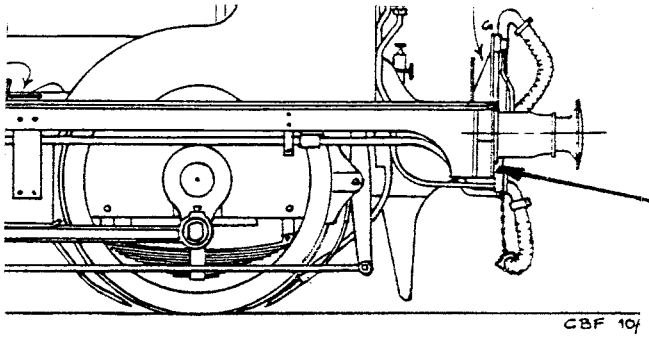

Fit cast buffer beam instead of rivet detail overlay on later locos.

Fit spectacle rings and coal bars made from 0.45mm wire before main construction

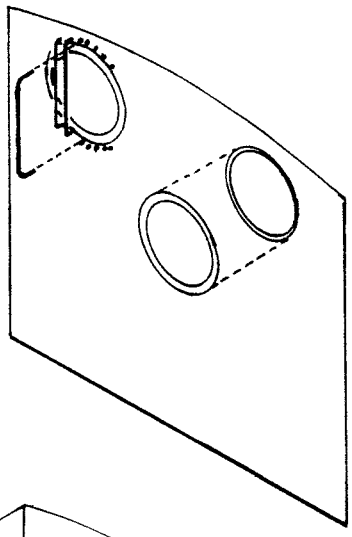

Alternative Cab Back and Bunker

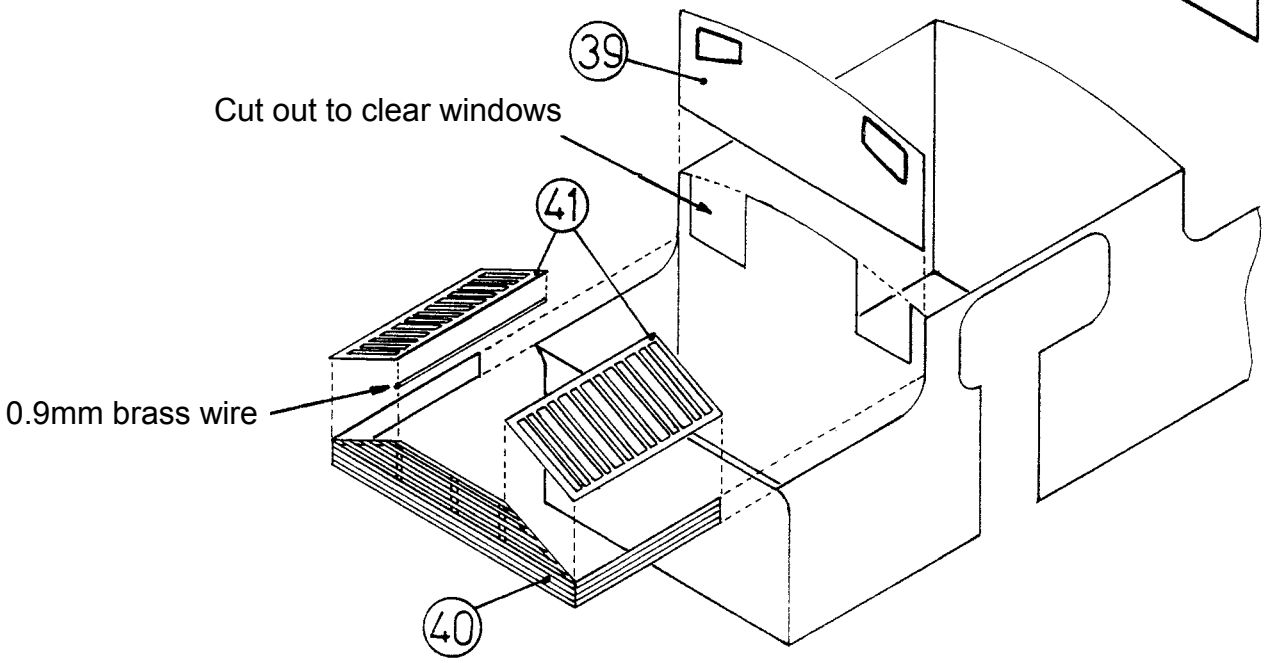

Cab Beading

You may find it desirable to fit beading before main construction

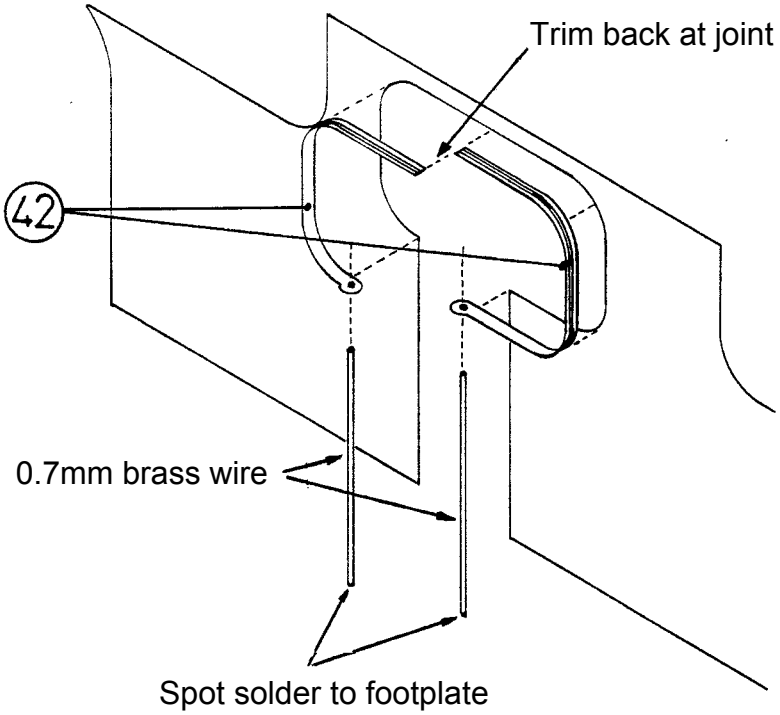

Cab Interior

You may find it desirable to fit parts 45 & 46 before main construction

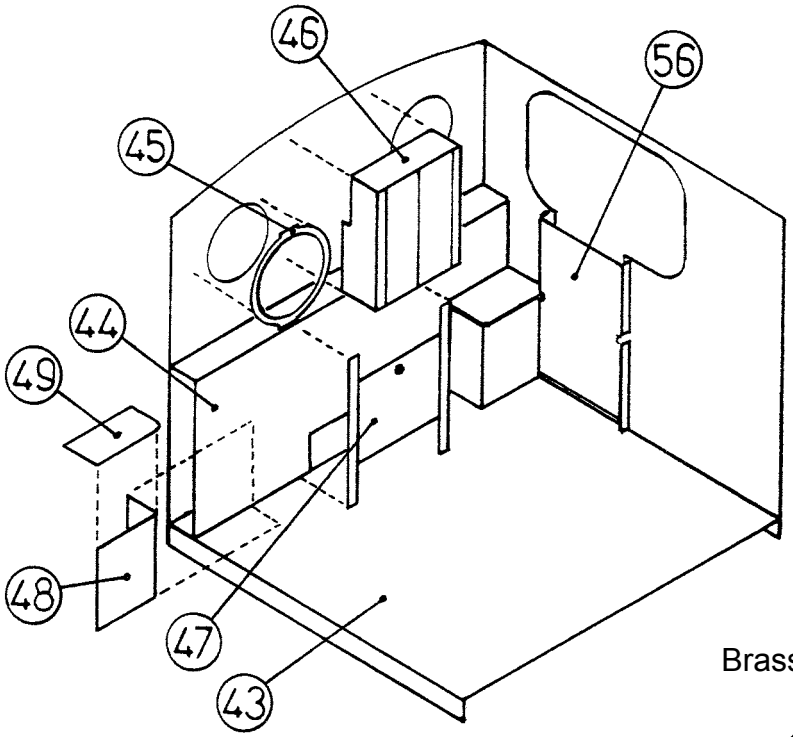

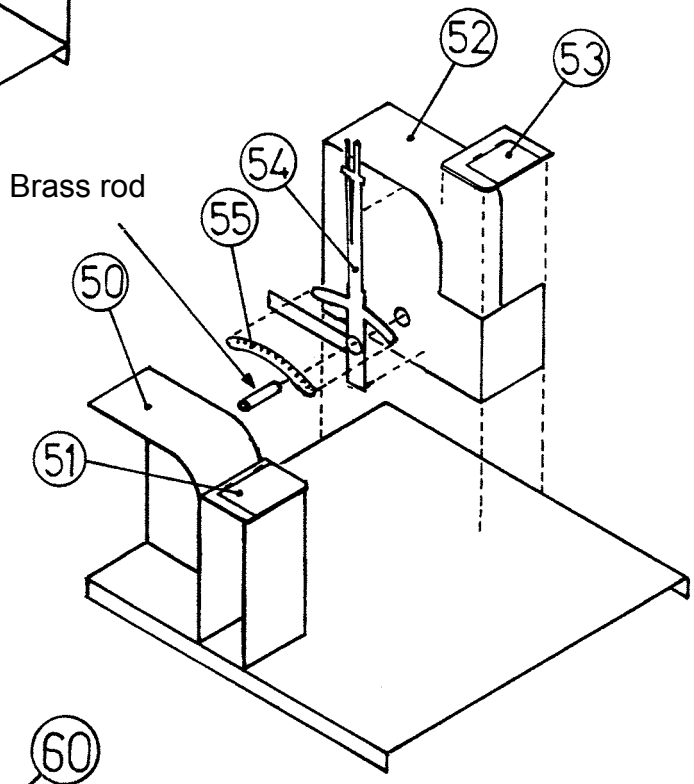

Cab Roof

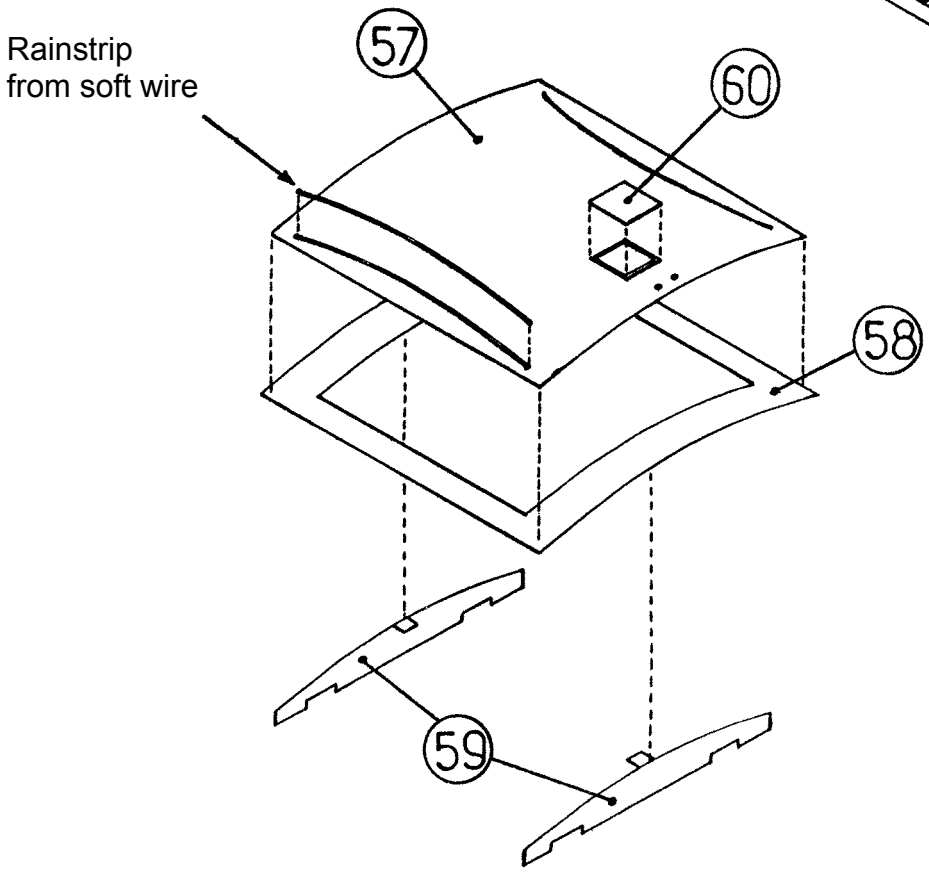

Boiler. Pre-curve the boiler, pin a former to a block of wood and solder boiler end to this. Repeat for other end then finger and thumb boiler bottom circular and solder

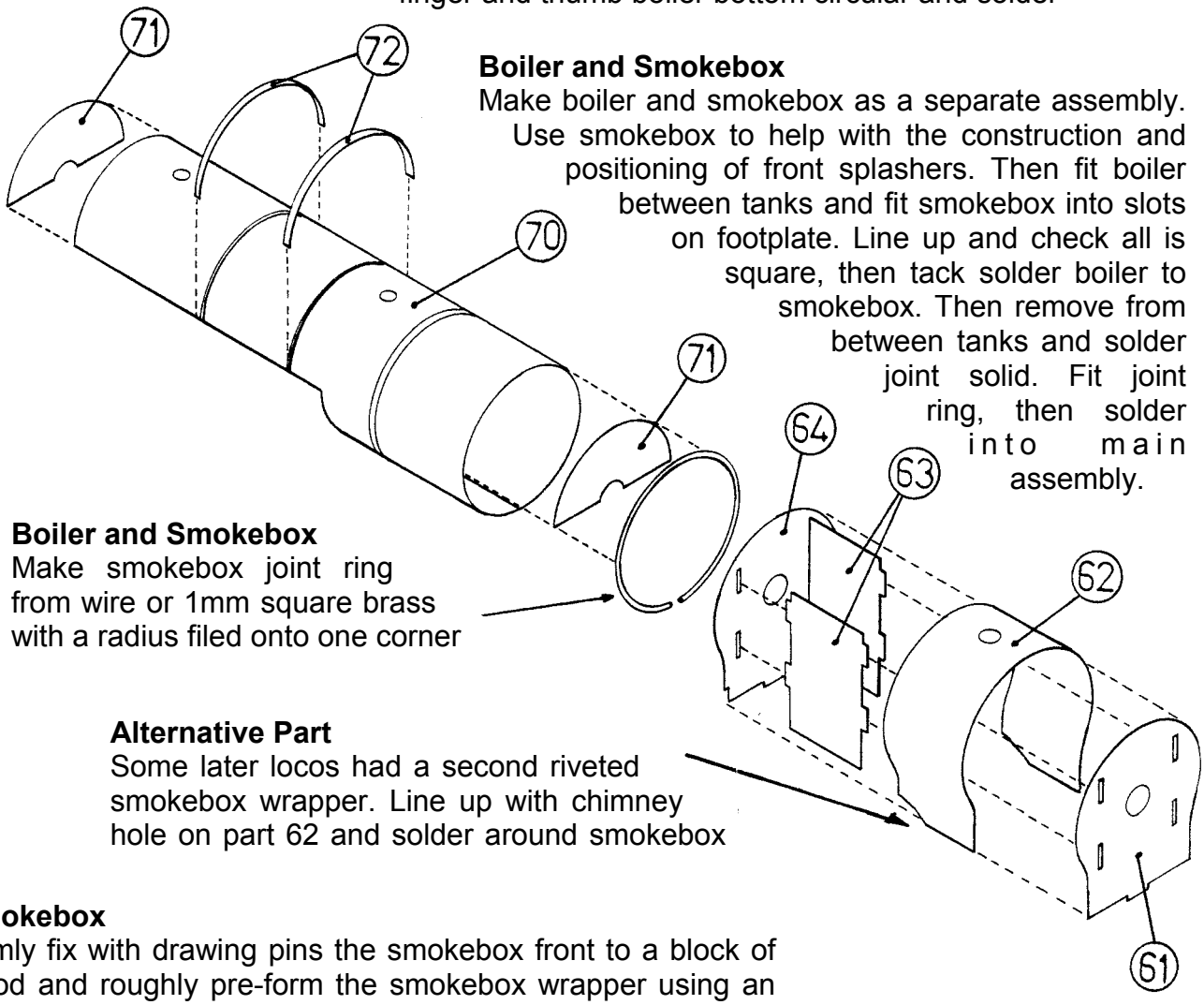

Boiler and Smokebox
Make boiler and smokebox as a separate assembly. Use smokebox to help with the construction and positioning of front splashers. Then fit boiler between tanks and fit smokebox into slots on footplate. Line up and check all is square, then tack solder boiler to smokebox. Then remove from between tanks and solder joint solid. Fit joint ring, then solder into main assembly.

Boiler and Smokebox
Make smokebox joint ring from wire or 1mm square brass with a radius filed onto one corner

Alternative Part
Some later locos had a second riveted smokebox wrapper. Line up with chimney hole on part 62 and solder around smokebox

Smokebox
Firmly fix with drawing pins the smokebox front to a block of wood and roughly pre-form the smokebox wrapper using an off cut of pipe and drill shanks etc. Position the wrapper to the centre of the smokebox front top (note etched centre marks). Starting from the top work your way round, soldering to the front and using this as a former. Solder spacers in place, then solder smokebox rear to wrapper.

Front Splasher

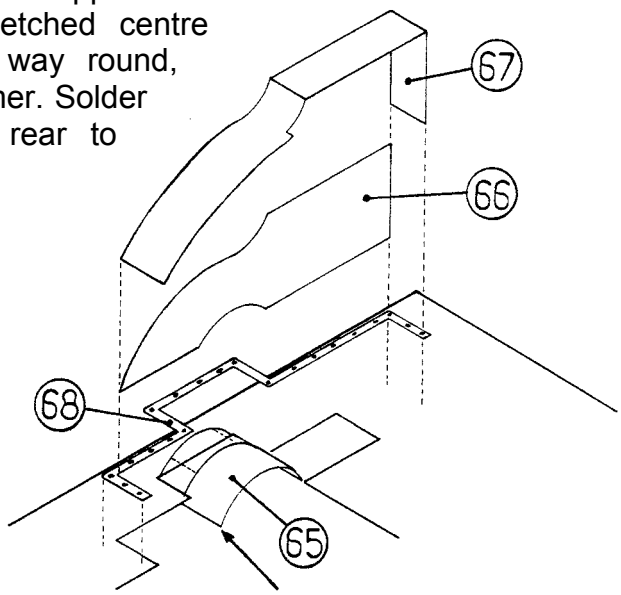

Cut off excess and file flush with underside of footplate.

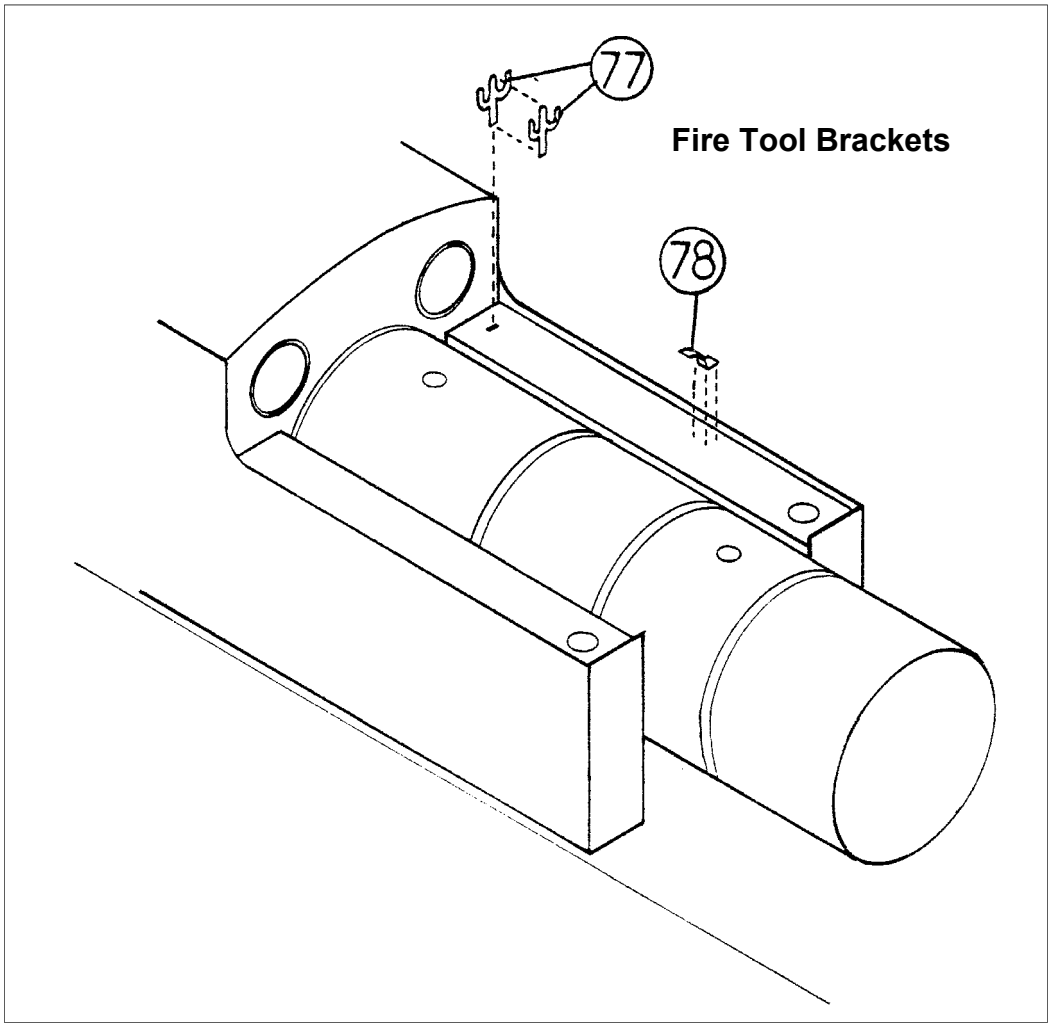

Cosmetic Screw Coupling. Solder together both halves of each hook and then using round-nosed pliers form the four links into U shapes. Dress the tops of two links with a file so that they will pivot freely in the slot in the hooks. Thread one of these links through the hook and spring the ends over the pegs on the cast centre. Then fit the bottom link.

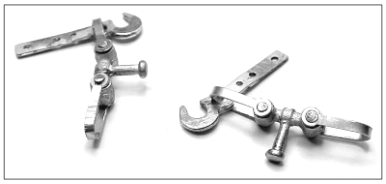

I pass the hook shank through the buffer beam slot then solder solid and trim off flush.

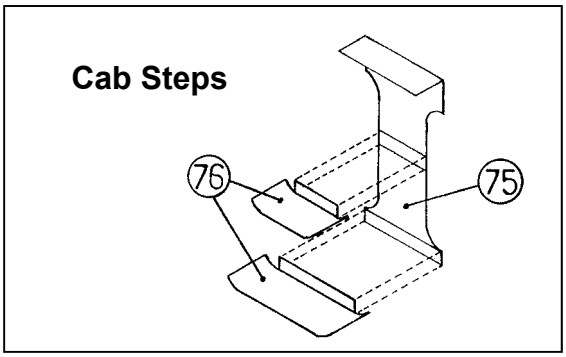

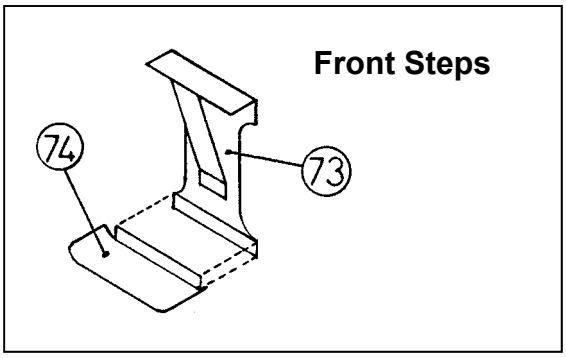

Fit the handrails made from 0.7mm brass wire. In common with the other kits in my range I have included split pins to support the handrails. These are fairly easy to use and their appearance can give a better representation of the prototype handrail supports than some of the turned brass alternatives.

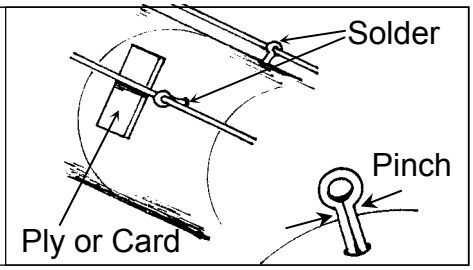

Casting Positions

To fit castings use main drawings for reference. Later locos had the Westinghouse Pump fitted onto the front of the left hand tank. Early locos had it in a cupboard in the cab. Some alternative castings are provided to help you build later locos.

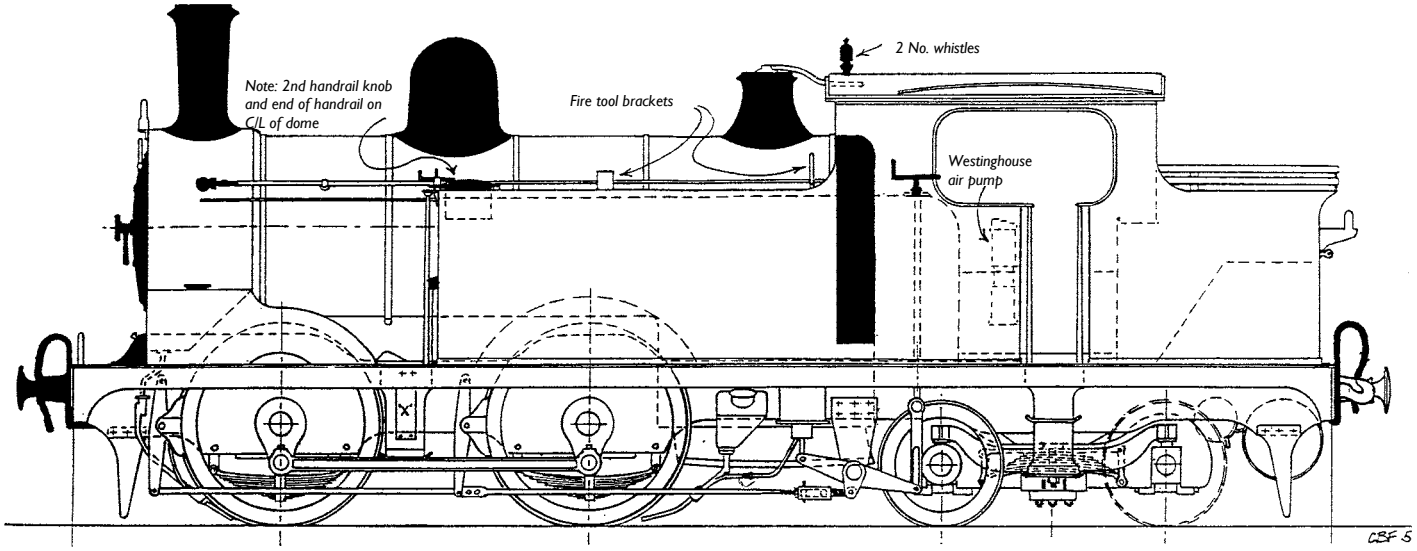

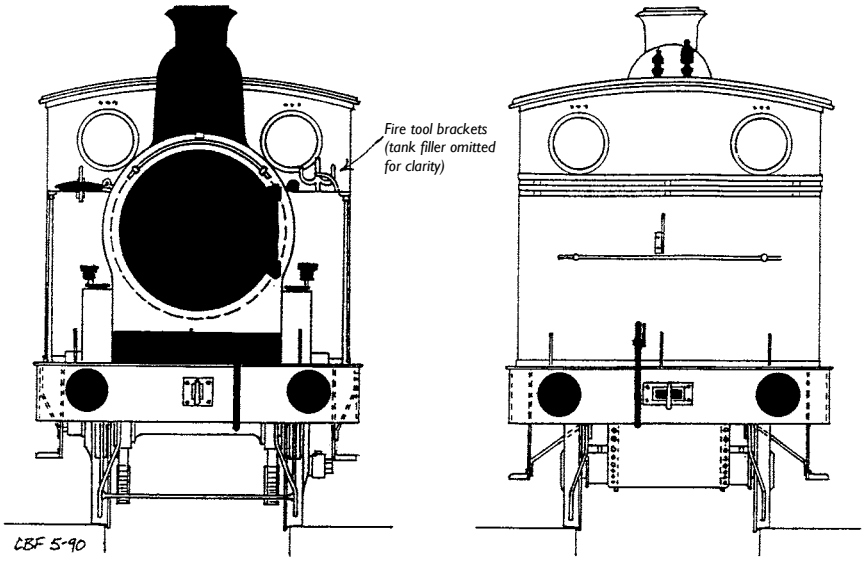

Note alternative boiler fittings and positions.
Hole centres are marked on underside of boiler.

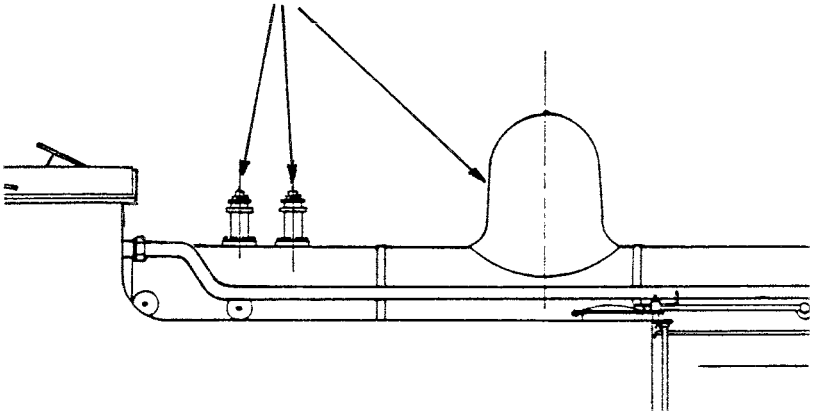

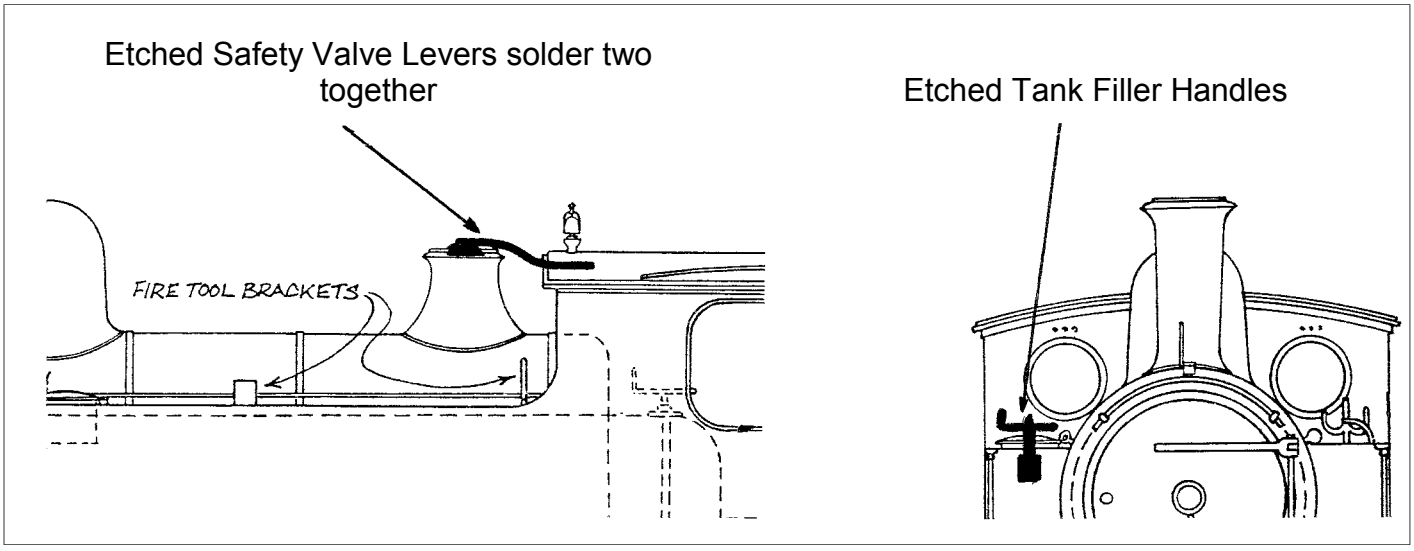

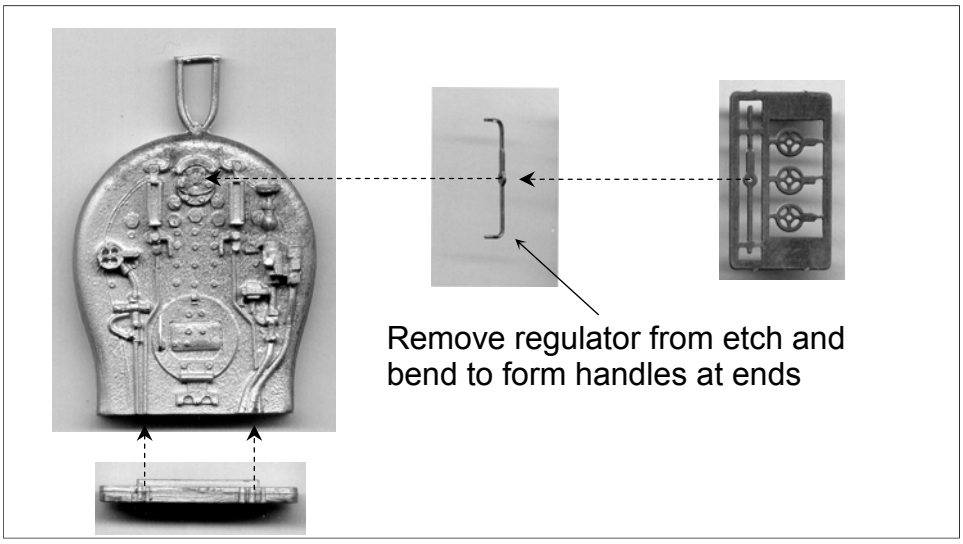

To get the loco to run steady, you will have to put weight forward of the second driving axle. I used a piece of 1" copper water pipe full of molten lead in the front of the boiler. I secured this with milliput. You will find a bit of experimentation with weight and bogie spring tension will be necessary to get the best running on your layout.

Prototype Reference

This kit was developed from an article by Colin Foster in the North Eastern Express No 119, the journal of the North Eastern Railway Association. Colin Foster kindly gave me permission to use his drawings for the instructions.

As the G5 class had numerous detail changes made throughout their lives a good photograph of you chosen prototype is essential. Try to get one of the two following books.

An Illustrated History of N.E.R. Locomotives.
Ken Hoole
Oxford Publishing Co.

Locomotives of the LNER, Part 7
The Railway Correspondence and Travel Society