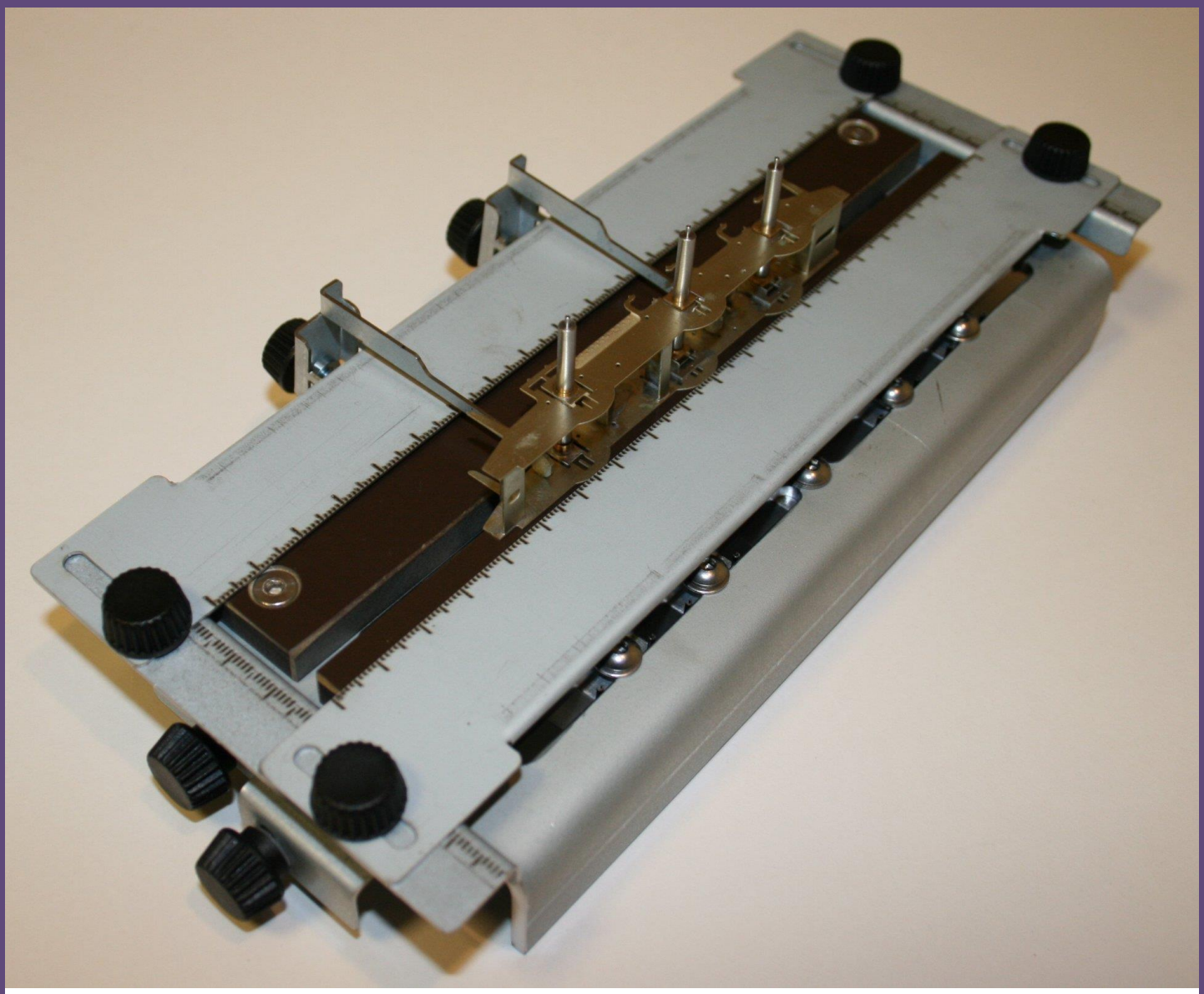

Avonside Works

CHASSIS² PRO USER MANUAL

Issue 3f

CHASSIS² PRO USER MANUAL

Contents

Contents 2
Scope 2
Packing List 3
Product Description 4
Specification 4
Parts Identification 6
Instructions for Use 12
Cleaning & Maintenance 15
Further Information 16
Manufacturer Information 16

Scope

This manual covers both **CHASSIS² PRO** and **CHASSIS² SUPERPRO** as from serial numbers 025 onwards. The differences between the products are highlighted in the text. All photographs are of the **CHASSIS² PRO** the design of the **CHASSIS² SUPERPRO** is exactly the same but each side of the centreline of the jig is 75mm longer. The **CHASSIS² Lite** identical to the **CHASSIS² PRO** except that it only has capacity for only 3 axles, an upgrade set to 5 is available. All instructions for the **CHASSIS² PRO** also apply to the **CHASSIS² Lite**

Packing List

Your **CHASSIS² PRO** is housed in a robust plastic storage case containing:
CHASSIS² PRO jig, ready assembled
5 off 1/8” Short Pins
5 off 1/8” Long Pins
5 off 2mm Long Pins
4 off Clamps with thumb screws
1 off Vertical Fence Plate
1 pair Vertical Plate support brackets
2 Thumb Nuts for Vertical Fence Plate
1 off 2.5mm Allen Key
1 bag of Silica Gel
Instruction CD

Your **CHASSIS² Lite** is housed in a robust plastic storage case containing:
CHASSIS² Lite jig, ready assembled
3 off 1/8” Short Pins
3 off 1/8” Long Pins
3 off 2mm Long Pins
4 off Clamps with thumb screws
1 off Vertical Fence Plate
1 pair Vertical Plate support brackets
2 Thumb Nuts for Vertical Fence Plate
1 off 2.5mm Allen Key
1 bag of Silica Gel
Instruction CD

Your **CHASSIS² SUPERPRO** is housed in a robust plastic storage case containing:
CHASSIS² PRO jig, ready assembled
5 off 3/16”” Short Pins
5 off 3/16” Long Pins
4 off Clamps with thumb screws
1 off Vertical Fence Plate
1 pair Vertical Plate support brackets
2 Thumb Nuts for Vertical Fence Plate
1 off 2.5mm Allen Key
1 bag of Silica Gel
Instruction CD

Product Description

The **CHASSIS² PRO** (Chassis Squared Pro) range of are jigs designed to enable any reasonably skilled model locomotive builder to easily and quickly construct a chassis that is square and true. It is designed to suit rigid, compensated or sprung chassis with between 2 and 5 axles for locomotives and tenders.

As with all tools, treated with care it will have a long and useful life, please refer to care and maintenance section before using this tool.

This is not a toy and is not suitable for young children.

Specification

The **CHASSIS² PRO range** can be use to assemble chassis from 2 to 5 coupled or non coupled axles. The minimum pitch between axles is 16mm. The maximum wheelbase for the **CHASSIS² PRO** is 152mm (38’ 0” in 4mm scale) and for the **CHASSIS² SUPERPRO** is 302mm (43’ in 7mm scale).

As delivered the **CHASSIS² PRO** comes with pins for 1/8” (long and short) and 2mm axles (long only) which should suit the majority of 4mm models. The 1/8” pins have coupling rod alignment pins of 1mm diameter. If you need larger diameter use the bushes from the loco you are building. The **CHASSIS² SUPERPRO** comes with pins for 3/16” (long and short) which should suit the majority of 7mm models and some in Gauge 1. The 3/16” pins have coupling rod alignment pins of 2.4mm diameter. All pins have a screwdriver slot in the end for ease of removal.

Spare pins of all sizes are available individually or in sets. Also 3mm are available in limited quantities, more will be made if demand justifies their manufacture. The units are designed to cope with a range of chassis widths from Narrow Gauge to outside crank Standard Gauge chassis. Broad gauge outside cranks may need longer pins, which can be made to special order.

The **CHASSIS² PRO** is made from quality materials using precision made components. Each unit comprises a heavy laser cut precision CNC formed U channel main frame made from 3mm zinc coated steel. Inside this frame are fitted 1 fixed and 4 sliding blocks. The centre fixed block and each of the sliding blocks have mounting holes for axle alignment pins. The sliding blocks are clamped and released by allen headed screws and run in slots. Pins in the blocks are intended to limit the skew of the blocks, even though skew will not affect the accuracy of the jig. The axle pin mounting holes are referenced to the top surface to maintain the 90° reference between the axle pin and the work surface.

The unit is fitted with screw adjustors, which adjust the position of the sliding blocks. Some users will find these a benefit and others will find them a nuisance. The screws are removable so the choice is yours. The pitch on these adjusting screws is 0.7mm per revolution allowing for accurate positioning. It is recognised that a lot of turns may be needed to adjust between one chassis and the

next, especially in '7mm' scale, but the choice of accuracy over convenience was made. It is always possible to remove the locknuts and then remove the adjusters completely for manual adjustment if desired.

On top of the main frame are fitted Tufnol® work surfaces. These presents an uninterrupted flat surface for the chassis side, except for the pins to align the horn blocks. They also provide thermal insulation so that the base plate does not act as a heat sink when soldering. The Tufnol® work surfaces are easy to replace if damaged. These blocks are asymmetric to enable the gap between them to be minimised and expanded if the extra space is needed for intrusion by horn blocks such as those from Brassmasters. There are chamfers on the corners of the blocks to identify orientation, if the chamfers are on the outside corners the gap is narrower.

On top of the Tufnol® work surfaces are two sliding fences which have multiple purposes. First to provide a reference edge to check the chassis is level against the axle line. Second is to provide calibration marks for checking things are vertical to the frame. Thirdly to check the pins are in line and finally they act the mountings for the clamps used to hold the frames and horn guides in place. To use the clamps, slide the sliding fence to its extreme outer position, adjust so as the clamp hits the work piece in the right place and clamp tight. Hook the clamps under the slider at the one end (beyond the end of the flange) and slide towards the centre engaging on the turned down flange.

Calibration marks are placed in both axes to give a quick indication of whether the chassis is true to the pins and set at the right height. Users can always measure for themselves to ensure greater accuracy. If the bolts holding the Tufnol® work surfaces are loosened the alignments should be rechecked.

To further assist with alignment and to provide a means of holding chassis spacers during assembly a bridge is provided. This bridge slides along the main frame. Again a Tufnol® work surface is provided to act as thermal insulation. Anyone contemplating building a chassis will have sufficient skills to make further special bridge pieces mounted on 8mm X 8mm brass angle readily available from DIY stores.

Sliding fences are provided for aligning the chassis sides. A special vertical fence is also provided to align the two halves of the chassis.

Parts Identification

The following pictures and drawings identify the main parts of the tool and show how they are assembled together. All parts are available as spares.

Main Frame

Sliding Block

Fixed Block

End Flange

Adjuster Support Flange

Sliding Fence

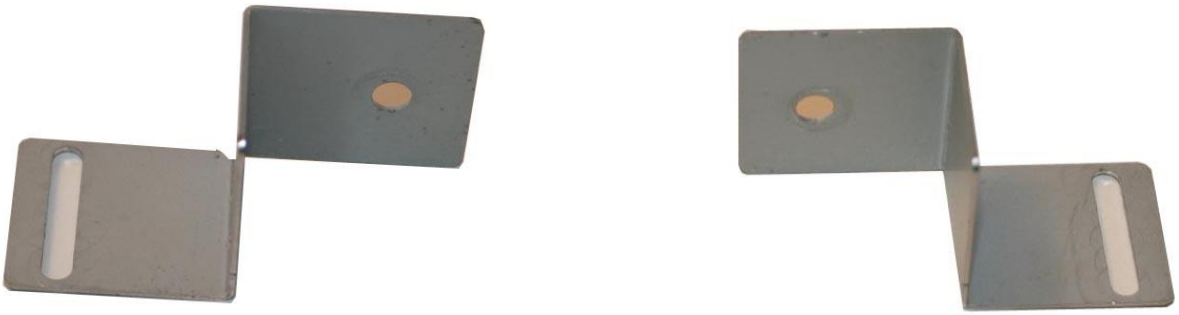

Vertical Fence Support Brackets (Left and Right)

Vertical Fence Plate

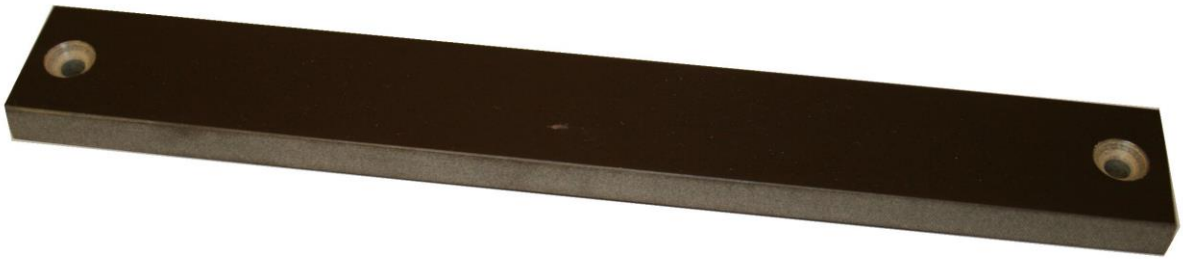

Tufnol® Block

2mm, 1/8” Long and 1/8” Short Pins

Bridge Tufnol® Block

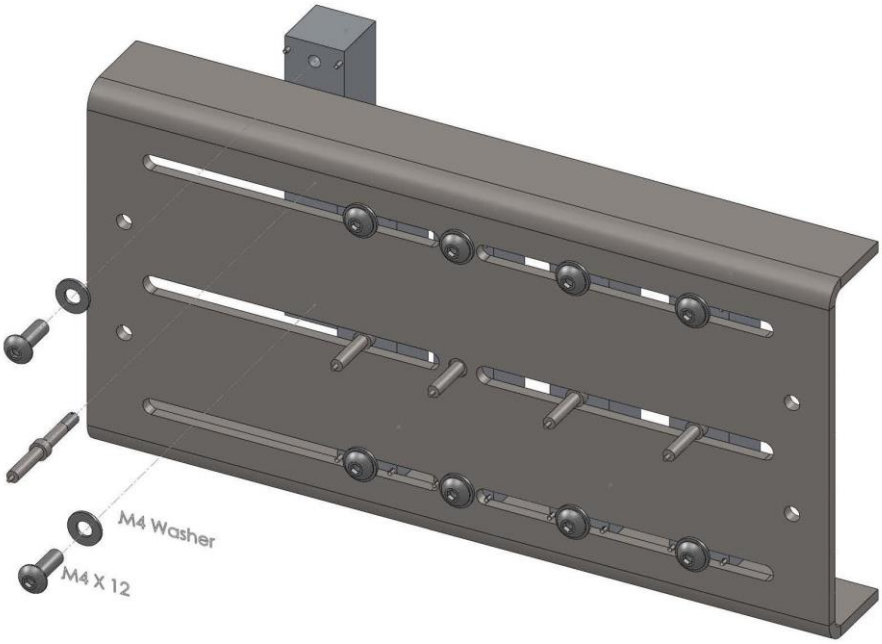

Block Assembly

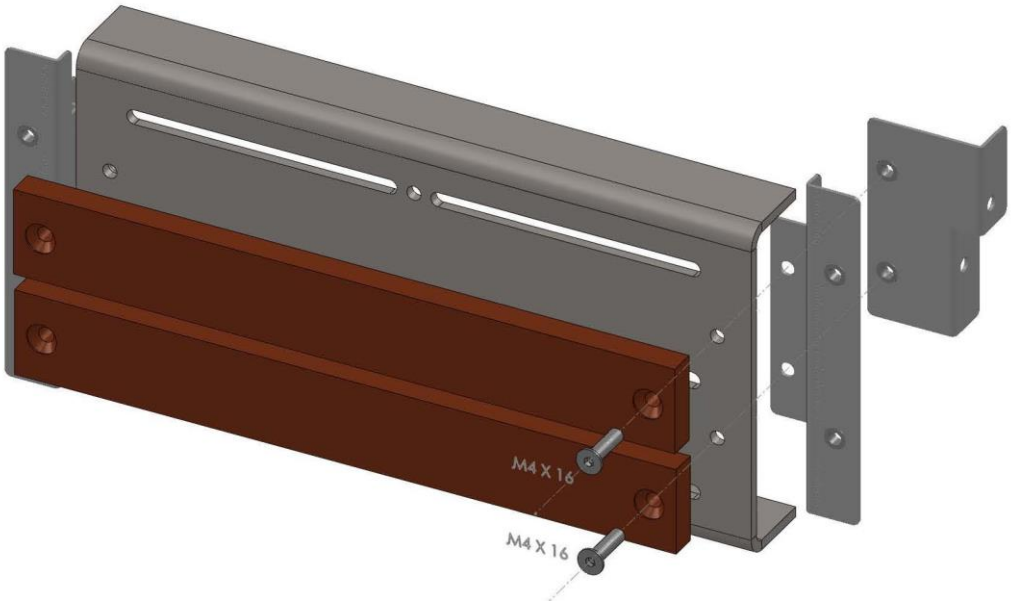

Flange Assembly

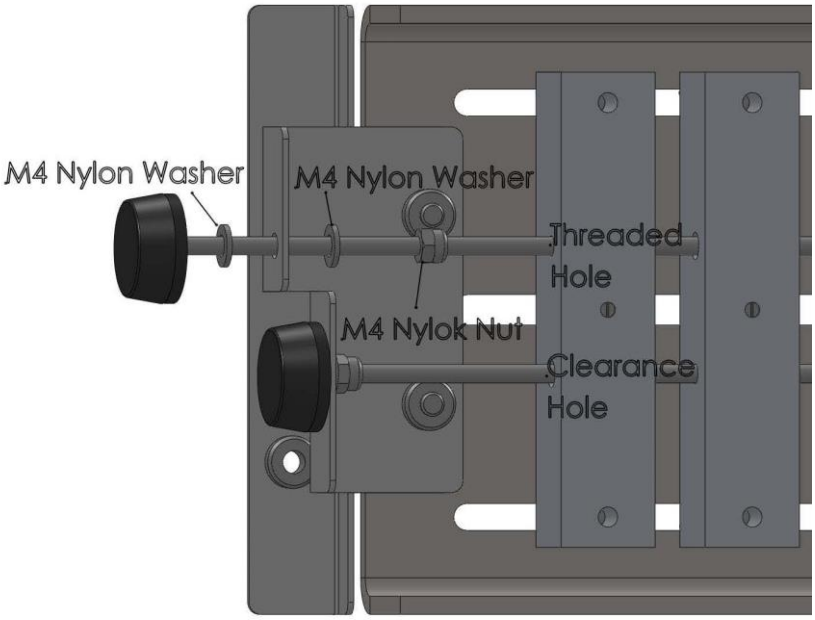

Adjuster Assembly

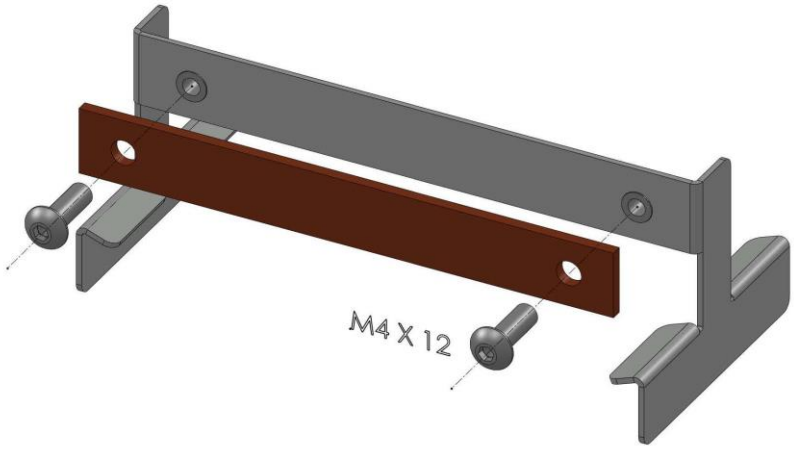

Bridge Assembly

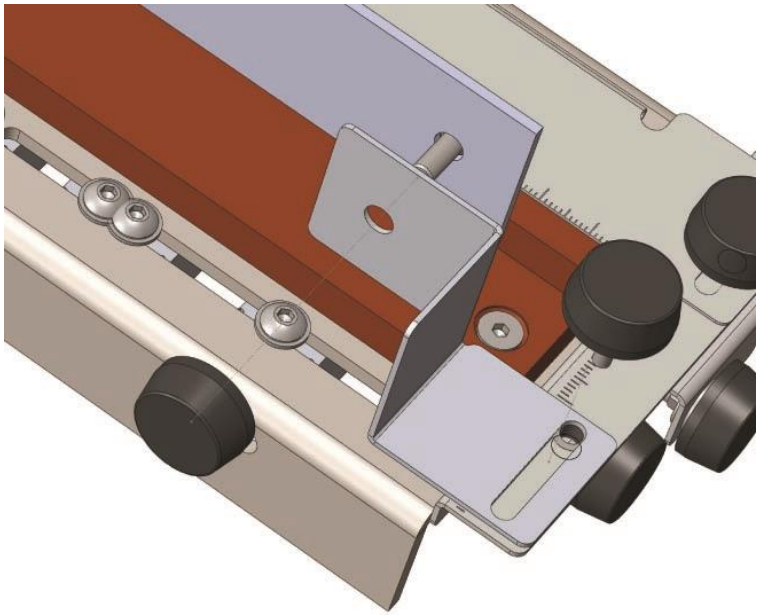

Vertical Fence Assembly

Instructions for Use

The unit can be used to build a chassis in the conventional way, that is to build the chassis box first and then fit horn guides afterwards. The **CHASSIS² PRO** however, allows a different approach described and we recommend that you try this.

This method is to fit the horn guides to each frame separately, then to assemble the frames together to make the chassis. The benefit of this is that both sides are built using the same pins to the same settings. Also the location of the frame on the pin is at the same point along the pins length further reducing possibilities of errors. Equally importantly, there is much better access for checking positions before assembly and also for soldering.

1. Fit the short pins. Only fit the number of pins needed, always use the centre (fixed) block. Screw the pins fully home, no more than hand tight.

   The centre block is fixed and there is no need to undo it in normal operation. The 4 sliding blocks need to be set in position relative to the centre block. The locomotive coupling rods are used as the reference for this. If there are no coupling rods to use as a reference (i.e. tender chassis or adjustable rods) then the positions are less critical and can be set by measurement or by eye. The **CHASSIS² PRO** can then be used as a jig to provide centres for assembling the coupling rods.

   Otherwise the coupling rods (rigid or articulated) are used to set the jig. If the holes in the rods are smaller than 1mm (2.4mm for 3/16” Axles) it is recommended that they be opened out to 1mm (2.4mm) with a drill or reamer. These can then fit directly on the pins. If they are over 1mm then they should be opened out to the size of the crankpin bush that you will use on the loco, and then sit on the crankpin bushes on pins.

2. Slide the sliding fences up to the pins. Check that the pins form a straight line. The blocks have limited scope for error but it is always worth checking. If they are not in line the culprit is probably the fixed block, loosen and reposition this.

3. Loosen the bolts on the sliding blocks (not the fixed central block). Drop the coupling rod onto the pins, one section at a time starting from the centre pin and adjust one of the sliding blocks using the screw adjuster until the rod drops onto that pin. Pinch the clamp bolts by hand and continue until all the pins are in the correct position.

4. Remove the coupling rod (to prevent any stress if the blocks move) and tighten the bolts with the 2.5mm allen key. Now use the rods and sliding fences again to recheck the alignment of the pins.

User Tip: For 3 or 4 axle locos use a long pin in an unused sliding block as an end fence.

5. If any, or all, of the axles have fixed bushes decide if you want to fit the bush from the outside or inside of the frame. Place the chassis side over the pins accordingly and drop the bush(es) over the pins and seat on the chassis. Slide one of the sliding fences up to the top edge of the chassis (normally the best for a reference point) and tighten the thumb screws on the sliding fence. Check the sliding fence is true against the calibration marks on the end flanges. Clamp the frames with the clamps provided (located on the other sliding fence). Adjust the position of clamp tips by moving the sliding fence. Solder the bushes. Do not over tighten the clamps, they are only intended to provide a light pinch. Over tightening may cause the frames to distort, the sliding fence to bow or the clamp to deform.

User Tip: Some users do not like the clamps, alternatives are tape or Blu-Tack.

For moving horn blocks place one chassis side over the pins with the inside face up. Use the sliding fence as above and clamp the chassis. There is a small gap between the Tufnol® and the pin to allow the flange of a fixed bearing to sit without lifting the chassis frame, check that the chassis is flat and that excess solder is not lifting it. For a fully sprung chassis it is traditionally hard to ensure that the axles are centred in the holes. The jig will ensure that the axles are true and square, the calibration marks on the sliding fence will assist in ensuring that each side is the same location relative to the axles.

It may be easier to temporarily use one fixed axle to set the position of the others. This will allow it to be built as a compensated chassis and then to cut out the chassis and fit the final horn guide. Some chassis are already cut for full springing so this may not be possible. It is possible to use a discarded cut out piece from another chassis temporarily soldered to the side to enable this technique to be used.

6. Align the chassis side and clamp as above.

7. Fit each horn block to its horn guide and drop over the Pin. As the chassis is now clamped in place the other sliding fence can be slid to its fully back position and two further Clamps slid along to clamp the horn guide in place. Ensure the horn block is at the correct ride height in the horn guide and that the horn guide is vertical in the chassis. The open design of the **CHASSIS² PRO** enables easy access for squares, rules and other tools. With experience visual alignment across the surface using the graduations on the fence will give a good guide to trueness.

User Tip: Clamp or drill and bolt a vertical plate to the side frame of the main frame and measure from here.

Users Tip: Clamp a 6” rule to the sliding fence with magnets to give a line for the top edge of the horn guides, keeping them both square and in line.

8. Solder each horn guide in place. This is an ideal task for resistance soldering where the probe can be used as a clamp and the jig provides the electrical return path.

9. Repeat for all other horn guides on this side of the chassis.

10. After assembling one chassis side remove and repeat with the other side. Do not forget to rotate the jig through 180° and to put the other chassis side on the jig the other face up. You can temporarily drop the first chassis side on top to ensure ride heights match. Temporarily replace the sliding fence with the vertical fence for this. The pins in the vertical fence are a loose fit in the flange holes to allow some movement to ensure the plate touches the Tufnol® block so tighten the bolts to the end flanges first.

11. When the horn guides are fitted, leave the chassis side in place for the next step. If assembling a rigid chassis ensure that it is inside up.

12. Now the chassis spacers can be fitted to one side. The bridge can be slid along the main frame to provide a reference surface for the spacers. The working surface of the bridge provides thermal insulation to stop the bridge becoming a big heat sink. Clip the chassis spacer to the work surface using a hair slide bent to suit.

    Adjust the position of the bridge and the spacer until the spacer is in the desired position and solder. Repeat until all spacers are fitted.

User Tip: An alternative is to hold the spacer directly on the metal face of the bridge with strong magnets.

User Tip: Use an off cut of angle brass to set a reference plane for horizontal spacers.

13. Remove this frame from the jig. Remove the short pins and replace with the long pins. Do not move the sliding blocks. Fit the side frame without the spacers on the pins. Fit the other side on top. Replace the sliding fence with the vertical fence and use this to ensure the alignment between the two halves. Then solder together.

14. There you have it, one true chassis. Do not forget to clean the chassis and the jig.

Cleaning & Maintenance

Various materials are used in the construction of the **CHASSIS² PRO**. The process of assembling a chassis inherently uses fluxes that are corrosive and care should be taken to ensure the product is kept clean.

The axle pins and all screws are from Stainless Steel and should not cause any problems. The sliding blocks are Aluminium again should cause no problems. The sheet metal parts are all made from Zintec (Zinc coated mild Steel) which will, to some extent, be attacked by flux. We have made performed experiments by painting various fluxes on cut edges of Zintec and found the effects to be mild. We have also observed that where liquid flux has wicked under sheet parts and not been cleaned, significant staining has occurred.

We recommend that after each use the minimum cleaning is the removal of the sliding fences and Tufnol® blocks and careful cleaning of the exposed surfaces. After each chassis is complete we recommend a full strip down and clean. To ease adjustment, we recommend that a light lubricating oil is applied where the pins on the sliding blocks touch the faces of the slots in the main frame.

There is inherently a conflict of interests. Some suppliers recommend liquid fluxes over paste fluxes because they are easier to clean from the loco chassis. We recommend paste fluxes as they are less likely to spread into unwanted areas of the tool. With paste fluxes we do recommend ultrasonic cleaning of the loco chassis, and ultrasonic cleaning baths are now cheap and readily available.

The Silica Gel supplied is to absorb moisture in the box. Please leave it there and do not throw away.

In the event of damage to any part a full range of spares is available from Avonside Works.

Further Information

We will endeavour to keep the website www.avonsideworks.com updated with comments and ideas. Customer comments, pictures and examples can be placed in the Avonside Works area of the 'Trade' area on www.RMweb.co.uk/community

If you have any questions, comments or feedback we will be pleased to hear from you by email: sales@avonsideworks.com of by any other means.

We hope you enjoy using the jig. We have more innovative ideas in development; please keep a lookout for other products on our website.

Please recommend us to your friends.

Manufacturer Information

Avonside Works is part of Eileen's Emporium, a trading name of:

Russan Limited
Unit 19.12 Highnam Business Centre
Newent Road, Gloucester
GL2 8DN. England

Registered in England 05148631. VAT: 842 6796 90

Tel: 01531 828009

Our Mission: Making better models easier.

Change Info:
V1> V2 Content improved. V2 > V3 Design changes to vertical fence. V3>V3b Phone contact added.
V3b>V3c Contact changed to Eileen's Emporium, forum removed. V3c>V3d spelling corrections, remove comment on bolts on vertical fence as part redesigned. V3d>V3e Remove 1.5mm bushes. Add notes on Lite. V3d>V3f remove end fence.
END