MOTORS, GEARS & MOTOR BOGIES

50p.

BRANCH LINES

This catalogue covers the full range of electric motors, gearboxes, flywheels, motor bogies and associated accessories that we stock. We are constantly adding to this range with our own and imported products that we feel will assist our customers to make better models

MOTORS

APRIL 2020

We stock and sell four different makes and ranges of electric motors for model railway applications. The most popular and widely recommended are the **MASHIMA** range. We stock almost the entire range of Mashima motors as well as all their spare parts. We also stock the **HANAZONO** range, which is sometimes marketed as 'Tenshodo' - these are used in "spud" motor bogies. The tiny open frame 'Minimotor' is a 'Z' gauge motor that fits some Minitrix loco's, such as the 2-6-2. The H.1024 is identical to a DS.10. The **CANON** 18/33 is a superb alternative to the Mashima motor for 4mm diesels and 'O' gauge. The **FAULHABER** coreless motors are stocked because some are identical to those used in Portescap units whilst the smaller ones are useful in small scale and tiny models. Please note that we no longer stock **Bühler** motors.

We test all Mashima, Hanazono and Canon motors before packing and include gearbox fixing screws with them.
All our Mashima, Hanazono and Canon motors are double shafted to permit flywheel attachment if required.
We stock spare fixing screws (6 for £1.20) and brushes and springs (£2.25 per set) for all Mashima and Hanazono motors.

In the tables below is all the data we have for our motors. For performance data we are dependent on and very grateful to the EM Gauge Society Ltd. The only coreless motors we stock are the Faulhaber range, all others being conventional motors with rotating coils and fixed magnets. Feedback controllers may be safely used with all conventional motors, though we would advise that some designs of feedback controllers do seem to cause motors to run much hotter than others. We regret that we are not qualified to give advice on controller choice.

Ref.	Type	Price (£)	Body Dimensions (mms			Shaft Dimensions (mms)		Fixing Screws		No Load	Max. Power
			Width	Length	Height	Diam.	Lengths	Centres	Size	mA/rpm	W/rpm
M/BL.9/16	OF	**17.25**	9.0	16.0	13.0	1.5	10/10	8	1.4	60/25,000	0.48/12,000
M.9/20	OF	**18.25**	9.0	20.0	13.0	1.5	10/10	8	1.4	50/17,000	0.62/8,500
FS mini 8.5/14.5	OF	**16.75**	8.5	14.5	12.9	1.5	11/11	8	2.0	?	?
M.10/15	FC	**18.00**	10.0	15.0	12.0	1.5	10/10	8.5	1.4	55/14,800	0.35/7,500
M.10/20	FC	**18.50**	10.0	20.0	12.0	1.5	10/10	8.5	1.4	63/15,000	0.68/7,500
M.10/24	FC	**18.50**	10.0	24.0	12.0	1.5	10/10	8.5	1.4	72/16,500	1.0/8,300
M.12/20	FC	**21.00**	12.0	20.0	14.0	1.5	10/10	8 + 8	1.4	50/17,000	0.68/9,500
M.12/24		**N/A**		All sold		production	ceased			40/12,000	0.48/6,000
M.14/20	FC	**22.50**	13.8	20.2	15.8	2.0	10/10	8 + 10	1.4 + 2.0	83/18,000	1.22/9,000
M.14/24	FC	**22.50**	13.8	24.2	15.8	2.0	10/10	8 + 10	1.4 + 2.0	100/16,500	1.7/8,500
M.14/26	FC	**22.50**	13.8	26.2	15.8	2.0	10/10	8 + 10	1.4 + 2.0	73/14,800	2.15/7,400
M.14/28	FC	**22.50**	13.8	28.2	15.8	2.0	10/10	8 + 10	1.4 + 2.0	60/12,500	1.86/6,300
M.14/30	FC	**22.50**	13.8	30.2	15.8	2.0	10/10	8 + 10	1.4 + 2.0	55/11,500	1.73/6,000
M.18/30	FC	**24.00**	18.4	30	23.2	2.0	12/10	12	2.0	50/10,800	3.60/5,000
M.18/33	FC	**24.00**	18.4	33	23.2	2.0	10/10	12	2.0	45/9,400	3.10/5,000
Minimotor	OF	**21.00**	8.5	15.25	11.5	1.0	6/7	7.5	1.4	100/36,000	0.98/19,000
H.17	OF	**14.50**	9.5	17	13	1.5	9/9	8	1.4	120/28,000	0.70/17,000
H.19	OF	**14.50**	9.5	19	13	1.5	8.5/8.5	8	1.4	95/29,000	1.20/18,500
H.21	OF	**14.50**	9.5	21	13	1.5	7/7	8	1.4	70/23,000	0.80/11,000
H.1024	OF	**15.25**	10.0	24	15	1.5	15/15	10	1.4	80/30,600	1.60/16,000
C.18/33	FC	**26.00**	18.0	33.0	22.0	2.0	15/15	15	2.0	*20/10,800	*4.5/5,500
F.8/16 (8V)	CL	**41.00**	8.0	16.0	8.0	1.5	2.1/0	#	#	10/17,800	?
F.10/16	CL	**43.50**	10.0	16.0	10.0	1.5	2.1/0	#	#	4/16,000	?
F.12/19	CL	**41.00**	12.0	19.0	12.0	1.5	2.1	#	#	4/15,800	?
F.16/16	CL	**40.00**	16.0	16.0	16.0	1.5	6.0	10	1.6	6/17,000	?
F.16/24	CL	**temp N/A**	16.0	24.0	16.0	1.5	6.0	10	1.6	10/13,000	?

We have reasonable stocks of the Mashima motors listed above, apart from the M.18/30 and M.18/33. The last of these are now only available with shorter 10mm long shafts.

ABBREVIATIONS USED

M - Mashima
H - Hanazono
C - Canon
F - Faulhaber
OF - Open Frame
FC - Flat Can
RC - Round Can
CL - Coreless
mA - milliamps
W - Watts
rpm - revs per minute
* - provisional data
? - no data available
- threaded end (Special mounting bush available @ £1.70)

MOTOR CHOICE

When choosing a motor, consider the following:
1.Width inside body
2.Length inside body
3.Frame spacing
4.Wheel clearances
5.Power required
6.Gearbox choice
7.Flywheel space
9.Shaft diameter
10.Fixing screws
11.Future access

Bachmann replacement
Mashima 14/xx + worm **£23.50**
(*not* including cradle/gears)

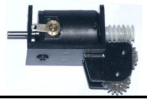

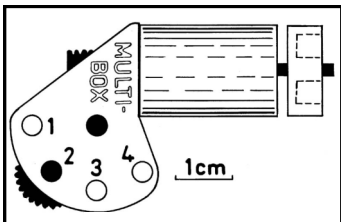

M.16/26 + Multibox + F'wl

M/BL. 10/24 + M8R + F'wl

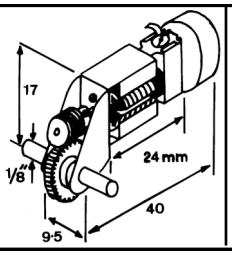

M.12/20 + 2S/SL + F'wl

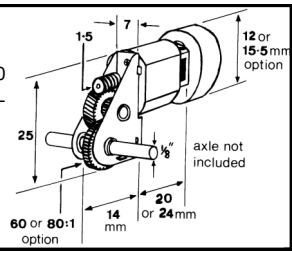

North Yard enclosed 1 and 2-stage 36:1 Gearboxes

INTEGRAL LONG SHAFT M.14/26 motor + flywheel

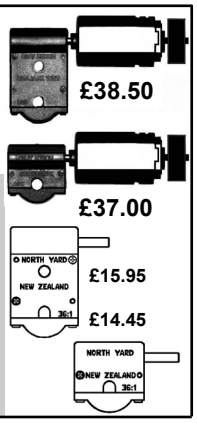

GEARBOXES

Our large and comprehensive range of gearbox kits provides an invisible drive system in most steam outline loco's

	ROMFORD gears	ULTRASCALE or BRANCHLINES REPLACEMENT gears
ONE STAGE	Romford based Single-stage	Ultrascale based Single-stage
TWO STAGE	Romford based Two-stage	Ultrascale based Two-stage

Our range of gearboxes is aimed at those modelling in 3mm, 4mm and 7mm scales and in between. Whilst initially confusing because of its diversity, our range may be considered as a square split vertically and horizontally in two each way (see tables below):

1. Vertically - **Romford** and **Ultrascale or equivalent** worm gearset based boxes.
2. Horizontally - **single-stage** and **two-stage** boxes.

Single-stage gearboxes contain a worm for the motor and a gear for the axle.
Two-stage gearboxes contain a worm and wheel plus a pair of spur gears to give extra reduction and/or to lift the motor higher in the body; e.g. to clear the wheels.
Romford gears are all metal and have grub-screws to retain them. **Ultrascale** gears are finer and use a press-fit nylon (or Loctite fit steel) worm. **Single-stage** boxes are simpler, but offer limted reduction ratios. **Two-stage** boxes are more expensive, but can offer greater reduction ratios and efficiency.
The **reduction ratio** gives the number of times the **motor** turns for **one** turn of the **axle**. For example, with **40:1**, the **motor** turns **40** times for **1** turn of the **axle**. The choice depends on the motor characteristics, driving wheel size and the performance required.

Romford based single-stage gearboxes

M8R our general purpose 40:1 box that fits motors with 8mm spaced fixing screws and 1.5mm diam. shaft. (**10R40** is similar for DS10/H.1024) **£7.50**
M16R similar to the M8R, but for motors with 10mm spaced screws and 2.0mm shaft. **£7.50**
8RC a more compact and narrower version of the M8R with gear as close as possible to the motor. Useful for smaller loco's and available as 30, 40, 50 or 60:1 with matched gears. **£8.00**
RSL Romford Slimline - a 7.5mm wide version of the 8RC that is ideal for 12mm/'TT' gauge and 'OO' loco's with limited space in the chassis. 40 or 50:1 **£8.50**
RU Romford Universal box. The same side section as the 8RC, but with side 'ears' to suit 'can' motors and motor fixing screw hole positions at 8 and 10mm centres. For 1.5 *and* 2.0mm motor shafts, 30, 40, 50 *or* 60:1 ratio. *Please state exact specification required.* **£8.00**
10R40/50 Romford 40 or 50:1 simple box for DS.10/H.1024 motors (10mm screw centres, 1.5mm bore worm) **£7.50**

Romford based 2-stage gearboxes - MULTIBOXES

Our unique MULTIBOX range now offers you more choice than ever before:

1. **a choice** of ratios: **32, 40, 53, 67 or 80:1** reduction.
2. **a choice** of worms to suit motors: **1.5 or 2.0mm** bore.
3. **a choice** of shape: **4 axle positions.**
4. **a choice** of **3 different frets** to suit different motors.

This choice plus the free running obtained makes the MULTIBOX the first choice of many customers for steam loco transmissions. You will find a 32:1 plus big 'can' motor in fast pacifics, a 53:1 plus small motor in 0-4-4T's and an 80:1 plus big motor in 2-8-0's. We also offer the **MULTIBOX EXTENSION** which can be fitted to 40, 53, 67 or 80:1 versions to extend the driven axle location choice without altering the gear ratio - this is ideal for 9F's and S&DJR 2-8-0's, for an invisible motor and gearbox.
When ordering a Multibox please state the ratio required and the motor to be used so we can pack it to match your exact requirements.

PRICES: All Multiboxes £18.50, Multibox Extension £7.50

COMPARATIVE TABLE OF BRANCHLINES GEARBOX DIMENSIONS

Type	Width	Gear diam.	Shaft-Centres	Motor end to axle c/l	Screw spacing	Worm Bore
M8R	9.7	13.4	9.5	9.5	8	1.5
M16R	9.5	13.4	9.5	9.5	10	2.0
8RC	8.8	13.4	9.5	7.0	8	1.5
RSL	7.5	13.4	9.5	7.0	8	1.5
RU	8.8	13.4	9.5	7.0	8,10	1.5,2
MX pos'n 1	8.0	13.0	9.5	18.5	8,10	1.5,2
MX pos'n 2	8.0	13.0	17.5	15.0	8,10	1.5,2
MX pos'n 3	8.0	13.0	20.8	7.0	8,10	1.5,2
MX pos'n 4	8.0	13.0	17.5	-1.0	8,10	1.5,2
39 SL/GS	6.5	10.25	7.0	6.0	8,10	1.5,2
39 ML	9.5	10.25	7.0	6.0	8,10	1.5,2
39 WL	12.0	10.25	7.0	6.0	8,8/10	1.5,2
51 SL/GS	6.5	13.3	8.5	7.5	8	1.5
51 ML	9.5	13.3	8.5	7.5	8,10	1.5,2
51 WL	12.0	13.3	8.5	7.5	8,8/10	1.5,2
2S SL 50	7.0	8.2	13.5	9.5	8,10	1,1.5,2
2S SL 60	7.0	9.0	13.5	9.5	8,10	1,1.5,2
2S SL 80	7.0	9.8	13.5	9.5	8,10	1,1.5,2
NY 1-stage	5.0	-	7.7	-	-	2.0
NY 2-stage	5.0	-	18.6	-	-	2.0

Ultrascale based single stage gearboxes

Branchlines 39:1 and 51:1 gearsets are now used as direct replacements for Ultrascale 38:1 and 50:1 using the same gearbox etches, as detailed below:

BRANCHLINES 39:1 and 51:1 SLIM, MEDIUM AND WIDE BOXES

These have our new 39:1 or 51:1 precision gearsets that replace Ultrascale 38:1 and 50:1 bossed gears. They mesh at the same centres and are supplied with the 38SL, 38ML and 38WL or 50SL, 50ML and 50WL frets/mounts. The gear is brass with a grub screw and the worm is steel for securing with Loctite.

39SL/GS and **51SL/GS Slim** boxes suit narrow gauge, compensated or sprung loco chassis available with 1.5mm or 2.0mm bore worms.
39ML boxes are available with 1.5mm or 2.0mm bore worms, and either 2.0mm or 1/8" bore axle gear.
51ML boxes are available with 1.5mm or 2.0mm bore worms, but only 1/8" bore axle gear.
39WL and **51WL** boxes are available with 1.5mm or 2.0mm bore worms and 1/8" bore axle gear.

***PRICE* 39:1SL, ML and WL BOXES: £9.75**
***PRICE* 51:1 SL, ML and WL BOXES: £10.50**

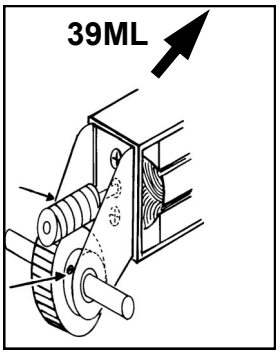

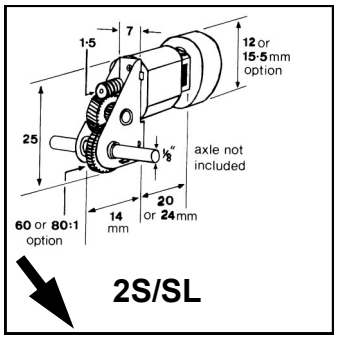

Ultrascale based 2-stage Gearboxes - 2S/SL

These were our first 2-stage gearboxes and were originally designed for a 12mm gauge loco, hence the 7mm width. They use a standard 38:1 Ultrascale worm gearset for the first stage and their 100DP brass spur gears for the final reduction, giving overal reduction ratios of **50:1, 60:1 or 80:1** with a choice of worm bores of **1.0mm, 1.5mm or 2.0mm**. The worm is made of nylon and is a press-fit, whilst the final drive (axle) spur gear has to be 'glued' to the axle with Loctite (243 or 603 or equivalent). **PRICE: £19.50**

NEW STOCK NOW AVAILABLE!

NY 1 AND 2-STAGE ENCLOSED GEARBOXES

These boxes provide easy to assemble and use remote, enclosed units that will fit most 4mm scale loco's and many others that use similar drive components. Both the 1-stage and 2-stage boxes have a 36:1 ratio that suits the modern 'can' motors in most loco's. The exploded diagram shows the 2-stage version. The 1-stage is very similar, but lacks the idler shaft and gear. The worms are steel, the idler gear is acetal and the axle gear is brass, to be fixed to an 1/8" axle with Loctite 601. The motor can be connected to the input shaft with either the included neoprene tube or a Branchlines drive shaft with U.J.'s. These boxes will suit tender drive loco's, 0-4-2T's, single wheelers and some diesels, to mention a few. (3mm axle versions available too)

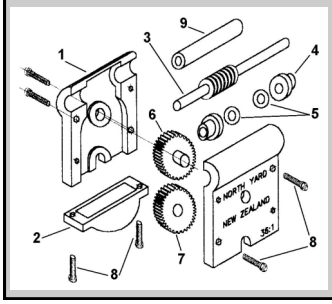

PRICES: 1-STAGE £14.45
2-STAGE £15.95

***FEW LEFT IN STOCK!* - version of remote NY gearboxes with 1.5mm input - will suit all 1.5mm shaft motors including Faulhaber coreless.**

SEPARATE WORM GEAR SETS

ROMFORD WORM GEAR SETS

Romford gears are all metal with steel worms and brass worm-gear-wheels, both fitted with 10BA grub screws for securing to motor shaft and loco axle. They are available for : **20:1, 30:1, 40:1, 50:1 and 60:1** ratios. The worms are available with **1.5mm, 2.0mm or 3/32"** bore for all ratios. **20:1** gears are available to fit **2mm or 1/8" axles** All **other ratios** are only available to fit **1/8" axles.** The meshing centre distance for Romford gearsets is approximately 1/4" for 20:1 and 3/8" for all other ratios. We stock and use mostly **matched sets** that Romford make specially for us. These are made to tighter tolerances to mesh close to the proscribed distance. We also stock the **new small Romford 40:1 gearsets** (similar to 20:1), 1.5 or 2mm worm bore. **ROMFORD GEARSETS £5.20, MATCHED £5.50**

ULTRASCALE WORM GEAR SETS, NEARLY ALL SOLD

All Ultrascale worm gearsets consist of a moulded nylon worm that is a press -fit on the motor shaft and a brass helical gear for the axle. The worms are available with **1.0mm, 1.5mm, 2.0mm or 3/32"** bore. Only ratio now available is **30:**1, as plain gears, without a boss, for securing to the axle with Loctite. Replacement gearsets for **Tri-ang 'TT'** loco's **now all sold**. **PRICES: all plain gearsets £5.75**

OTHER, SMALL WORM GEARSETS

TENSHODO "spud" 14:1 worm gearsets are very popular. They have a brass worm to fit a 1.5mm shaft and plastic helical gear to fit a 2mm axle. Sold in a packet of **TWO SETS for £3.50.**
BRANCHLINES 15:1 worm gearsets have a **steel worm 1.5mm bore** and **brass helical gear 2mm bore**. They are 0.3 Module gears with a centre distance of 3.55mm and are priced at **£7.25 per set**.

NEW BRANCHLINES 39:1 GEARSETS. These consist of a brass helical gear with a boss and grub screw on one side and a steel worm which is secured to the motor shaft with Loctite. Gears available with 2mm or 1/8" bore, worms 1.5 or 2.0mm bore. Meshing centre distance is 7.0mm. ***PRICE: £7.75 a set***

NEW BRANCHLINES 51:1 GEARSETS. These are similar to the 39:1's, gear OD is 13.25mm, mesh at 8.48mm. **PRICE: £8.25 a set**

FLYWHEELS

All our flywheels are precision turned in brass and are made to diameters to suit our most popular motors. The smaller flywheels are plain (solid), whereas all the larger ones are bored out (annular) so that the weight is mainly towards the outside where it has the greatest effect, although the 14mm are available either plain or bored out. Dimensions (in mms.) and prices are as follows:

SOLID	**Diameter**	10	12	12	12	14	14
	Thickness	6	4	6	6	6	6
	Bore	1.5	1.5	1.5	2.0	1.5	2.0
	Price	**£2.70**	**£2.70**	**£2.90**	**£2.90**	**£3.20**	**£3.20**

ANNULAR	**Diameter**	14	14	16	16	18	18
	Thickness	6	6	6	6	9	13
	Bore	1.5	2.0	1.5	2.0	2.0	2.0
	Price	**£3.20**	**£3.20**	**£3.50**	**£3.50**	**£4.00**	**£4.50**

DELRIN CHAIN AND SPROCKETS

This chain suits the larger scales, especially 7mm scale and above.
Ideal for modern image models, scenic accessories, turntables, etc.
The chain links are 3.1mm long and 4.1mm wide

Delrin chain (per foot length) **£5.80**

Sprockets - teeth (bore)		Price
8T (1/8")		**£1.80**
10T (1/8")	10T (3/16")	**£1.80**
12T (1/8")	12T (3/16")	**£1.80**
	15T (3/16")	**£1.80**
	16T (3/16")	**£1.80**
	18T (3/16")	**£2.30**
20T (1/8")	20T (3/16")	**£2.40**
	24T (3/16")	**£2.40**

SEPARATE SPUR GEARS

64DP BRANCHLINES BRASS SPUR GEARS

No.	PCD"	OD"	Bore	Tooth	Boss?	Price
10	0.156	0.188	1.5mm	2.0mm	no	**£4.50**
20	0.313	0.344	2.0mm	2.0mm	3.0mm	**£5.25**
24	0.375	0.406	0.125"	2.0mm	no	**£4.50**
27	0.422	0.453	0.125"	2.0mm	no	**£4.50**
29	0.453	0.484	0.125"	2.0mm	4.0mm	**£5.75**
30	0.469	0.500	2.0mm	2.0mm	3.0mm	**£5.25**
32	0.500	0.531	0.125"	2.0mm	4.0mm	**£5.75**

NOTE: bossed gears have a 10BA grub screw fitted in the boss.

NB: Our stock of Ultrascale Gears is almost exhausted, and it will be easiest to obtain them direct from Ultrascale. What we have left in stock is listed below:

100DP ULTRASCALE SPUR GEARS

(15T nylon, all others brass)

Teeth	PCD (ins.)	OD (ins)	Bore	Tooth width	Boss?	Price
15	0.150"	0.170	1.5 or 2.0mm	0.100"	0.083"	**£2.10**
37	0.370"	0.390"	3.0mm	0.075"	no	**£4.10**

PCD = Pitch Centre Diameter. OD = overall diameter over teeth.
Centre Distance for correctly meshed spur gears = (PCD 1 + PCD 2) divided by 2. Multiply inches by 25.4 for millimetres

O GAUGE GEARBOXES & GEARS

We produce **five** different, BRANCHLINES, single stage gearboxes for 'O' gauge with ratios of **13, 26, 25, 40 and 50:1**. The 13:1 and 26:1 have Ultrascale brass helical gear (grub screw) and **nylon worm.** The 40 and 50:1 boxes have a BRANCHLINES gearset with brass gear and **steel worm** both with grub screws. All our gears are made wide to permit some side-play in the box and increase lubricant retention, thus prolonging life. The 13:1 uses a 2-start nylon worm (2S). **The 25:1 is a heavy duty gearset which is fully interchangeable with most 40:1 gearsets**. All gearboxes have a simple, fold-up, nickel silver mount. **The 25 and 40:1 are available with a semi-enclosed (ES) gearbox kit** for extra gear protection from track dirt. **All boxes suit Mashima 18mm motors**, the simple boxes suit Canon motors if the fixing holes are elongated. All our 'O' gauge gears are for 3/16" axles and 2mm motor shafts. We also sell the gears separately. The prices are in the table below:

Ratio	Centre distance	Gearset nylon w'm	Gearset steel w'm	Gearbox nylon w'm	Gearbox steel w'm
13:1 (2S)	0.325"	£12.50	-	£15.50	-
26:1	0.325"	£12.50	-	£15.50	-
25:1	0.425"	-	£22.00	-	£25.50
25:1(ES)	0.425"	-	£22.00	-	£27.25
40:1	0.425"	-	£21.50	-	£25.00
40:1(ES)	0.425"	-	£21.50	-	£26.75
50:1	0.500"	-	£22.50	-	£26.50

All the above are supplied with worms for **2mm** motor shafts and gears for **3/16" axles**. **SPARE WORMS** are available separately: Steel **£10.50**.

BRASS BUSHES/BOSSES/SHIMS

We stock and sell a range of brass bushes to suit most scales.
"TOP-HAT" bushes for general bearing use on loco's and stock:
1/8", 2mm and 1.5mm in packets of 10 for **£2.50**
1mm Con Rod bushes (10) **£2.60**
1/8" to 1.5mm and **1/8" to 2mm reducing bushes** (10) **£2.50**
"STRAW-HAT" (short) bushes **1/8" or 3mm** (10) **£2.50**
3/16" 'O' gauge loco axle bushes (8) **£4.00**
BRASS BOSSES for gears, flywheels, etc. **2mm or 1/8"** bore **£1.90**
1/8" AXLE SHIMS (6 each, 3 thicknesses) **£3.50**
2mm AXLE SHIMS (8 each, 2 thicknesses) **£3.20**
3/16" axle shims (Slater's etched brass) **£5.25**

MOTOR BOGIES

TENSHODO "SPUDS"

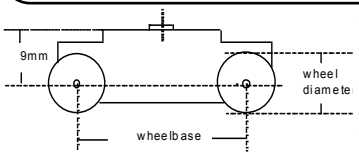

Tenshodo/Hanazono "Spud" 'OO'/'HO', 16.5mm gauge motor bogies are the best known, most popular and easiest to use. They are ready-to-run, straight out of the box, mount under the floor and come complete with a range of fixing brackets as well as a mounting for dummy side-frames. "Spuds" are available for different wheelbases (distance between axle centres) and wheel sizes (diameter over treads). We can supply from stock all these popular combinations:

WB.24.5, 26, 28.7 & 31mm with 10.5mm disc wheels £33.00ea.
WB.35 with 10.5mm disc wheels £36.00, or with
12mm disc wheels £37.00, and 14mm disc wheels £37.50

For **10.5 or 11.5mm spoked wheels** please add **£3.50** to the above 10.5mm disc wheel version price. For **12 or 14mm** disc wheels on shorter units we recommend fitting Black Beetle wheels (£6.50 for 2 'OO' axles).

NOTE: For EM, 18.83 and other wider track gauges than 16.5mm, it is necessary to replace the axle and wheels with another make that has **2mm axles**, fitting the "spud" axle gear to the centre of the new axle.

"BLACK BEETLE"MOTOR BOGIES

PLEASE NOTE:

We are no longer supplied with the Black Beetle motor bogies. We have a small stock of some sizes, otherwise they should be available direct from **Steam Era Models (Australia)**.

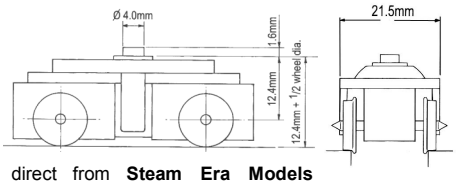

They incorporate a **Mashima 5-pole 'can' motor** and **nickel silver wheels**, all **metal 15:1 gears**. They are available in **powered** and **dummy** (unpowered) form so that pick-up can be from both bogies in a power car, for even better running. There is a choice of four wheel gauge/profile combinations: **'OO' universal, 'OO' fine-scale, 'EM' and '18.83/P4'**. 'Black Beetles are available with wheelbases from 25.5mm to 40mm and with wheels from 9.6mm to 14mm (**disc and spoked**). (Only 10.5,12 & 14mm disc wheels are available with 18.83/P4 profile).

"Black Beetle" WB.34/12, WB.34/14, WB.35/12, WB.35/14, WB.40/14, OO, EM or P4 (powered) **£48.50**
"Dummy Beetle" for various WB/wheel combinations
OO, EM or P4 (unpowered) **£17.50**

PLEASE STATE TRACK USED AND/OR WHEEL TYPE REQUIRED

UNIVERSAL JOINTED DRIVE SHAFTS

1.5mm x 1.5mm, 1.5mm x 2mm, 2.0mm x 2.0mm and 2.0mm x 2.4mm (3/32") in hard plastic with splined, sliding shaft and proper, ball-jointed UJ at each end which press fit onto shafts: **£3.75** each.

NOW IN STOCK:
Markits Universal Couplings 1.5mm x 1.5mm, 1.5mm x 2mm, 2mm x 2.0mm with 1.5mm steel shaft, grub screws for brass end cups and stainless steel ball: **£4.50** each.

USEFUL ACCESSORIES

AIRFIX/DAPOL 14XX GEAR brass replacement axle gear	**£6.75**
90° MOTOR MOUNTING PLATE for turning motor 90°	**£1.30**
'OO' (10mm) FRAME SPACERS screw-up (3)	**£3.20**
'TT' (7.5mm) FRAME SPACERS screw-up (3)	**£3.00**
'TT' (7.5mm) FRAME SPACERS etched (3)	**£1.60**
BEVEL GEARS (nylon) 16 tooth, 3mm bore, 0.5 Module, per pair	**£1.50**
SPUR GEARS (nylon).12 tooth, 2mm bore, 0.5Module, pair	**£1.30**
SPUR GEAR (nylon) 120 tooth, 6mm bore, 0.5Module, each	**£2.60**
2mm SINGLE SPLIT AXLES PARTS (3 axles worth)	**£8.00**
1/8" SINGLE SPLIT AXLE PARTS (3 axles worth)	**£8.50**
1/8" DOUBLE SPLIT AXLE (1 axle)	**£3.75**
SPLIT AXLE ASSEMBLY JIG (for 2mm and 1/8" axles)	**£11.50**
THIN, MED or THICK SUPER GLUE (20gm bottle)	**£3.60**
LOCTITE 243 nut locking compound (10ml)	**£8.95**
LOCTITE 603 retainering compound (10ml)	**£8.95**
LOCTITE PTFE SUPER-LUBE OIL (7ml dispenser)	**£8.95**
LOCTITE PTFE SUPER-LUBE GREASE (85gm tube)	**£10.95**
PIN VICE single ended, 0-1.0mm	**£3.50**
PIN VICE swivel head, 4 collet	**£5.50**
MICROBOX DRILL SET metric, 0.3mm to 1.6mm	**£10.00**
MARKITS NUT SPINNER SET (6, 8, 10, 12, 14, 16BA)	**£19.90**
MARKITS BACK TO BACK GAUGES (00, EM, TT)	**£5.20**

BRANCHLINES MB.35 MOTOR BOGIE KIT

This is easy to assemble, strong and powerful with good slow running. It is popular for EMU's, DMU's and Bo-Bo diesels. It has enough power to for a 4-car, all-metal unit as long a gradients and curves are not too extreme The fold-up chassis is in **nickel silver** for strength and easy soldering. It has **all metal gears with grub screws for ALL gears**. The **Mashima 14/20 'can' motor** drives a layshaft through 1.5:1 spur gears and this, in turn, drives each axle through Romford 20:1 worm gears, giving 30:1 overal gearing. With 14mm wheels this gives a scale top speed of about 65mph. **Now supplied with nickel silver disc wheels** ('OO' universal, 'OO' fine-scale, 'EM' or '18.83/P4' at an **all-in price of £48.50**.

Choose 14mm disc (for SR EMU's and class 20/4/5), 12mm disc (for DMU's), 14mm spoked (for class 21/22/29)

For **'EM' and '18.83'** gauges the MB.35 is ideal as the axles have no side-play and the kit is supplied with nickel silver wheels.

NOTE: the MB.35 has been successfully used by our customers for many uses for which it was not originally intended; e.g. extended by cutting and patching to give a 40mm wheelbase.

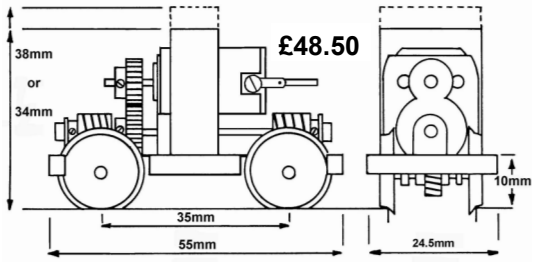

N/S BLACK BEETLE WHEELS

These are from the same company as 'Black Beetles' and are proving very popular for **BACHMANN, HELJAN and HORNBY diesels and coaches**. The **stainless steel** or **nickel silver** disc wheels are solid with a small insulating bush one side (double insulated available to order). They improve pick-up and slow running. A range of axle lengths are available, inc. Lima. Profiles and gauges are **'TT'** (RP25/88), **'OO' universal** (RP25/110), **'OO' finescale** (RP25/88), **'EM'** (RP25/88) and **'18.83'** (P4/scale). The range is extensive, the most popular ones being 8mm, 10.5mm*, 12mm* and 14mm* disc (* only these available for 18.83) **Price per axle is: £3.30 For 00/EM, and £3.60 for 18.83/P4**

For HORNBY 50 DIESELS - live 14mm wheels on special half axles ready to fit to Hornby muff/gear assembly for correct back-to-back. For 'OO' finescale, EM, 18.83 **£3.95 per loco axle**

Set for BACHMANN 105, 108, and Derby Lightweight DMUs (2 coaches, 12mm wheels) **£37.00 (centre car £17.00)**

Set for Bachmann EMU power bogies (14mm wheels on half axles) EM, P4, **£9.00**

Bachmann EMU bogies are too narrow to convert to EM/18.83 without widening. Full sets of 14mm live wheels on half axles for EM/18.83 are available to order:

Single car (MLV) £18.00 2-car (EPB, Class 205) £37.00
4-car (CEP) £72.00

14mm wheels ½ axles for **Blue Pullman** also available to order.

Full set for Bachmann LMS 10000/10001 using 12 x 14mm wheels on half axles (same wheels/axles for EMU power bogie) **£27.00**

These also fit the **new Bachmann Class 40.**

MAIL ORDER INFORMATION
POSTAGE & PACKING
PAYMENTS

We accept orders by post, e-mail, fax and telephone - mail to our PO Box, fax 24 hours and telephone during office hours only. We do not have retail premises and cannot receive callers.

PAYMENT: we accept payment in Pounds Sterling by UK bank cheque, Postal Orders, Mastercard, Visa, Maestro/Switch, Visa Debit, Solo, Electron or JCB cards. Overseas bank drafts must be in Pounds Sterling and be able to be cleared through a London clearing bank.

POSTAGE & PACKING: for **UK** orders please add **£2.50** per order under £30, **£4.00** from £30 to £60, **£5.00** per order over £60. For **EU** orders we add P&P at cost (plus VAT) and for **non-EU** exports and BFPO we deduct VAT and add P&P at cost (minimum **£4.50** for all non-UK orders).

BRANCHLINES, P.O. BOX 4293,
WESTBURY, BA13 9AA, UK
e-mail: sales@branchlines.com
Tel/Fax: +44-(0)-1373-82-22-31
Hours: ***Monday to Thursday***, 9.30-1.00, 2.00-6.00
Answerphone/Auto-fax and e-mail at all other times

© BRANCHLINES 2020, All rights reserved