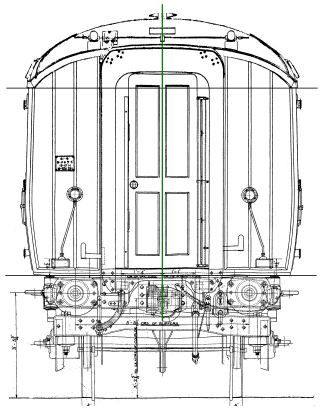

LNER 9'0" Carriage End

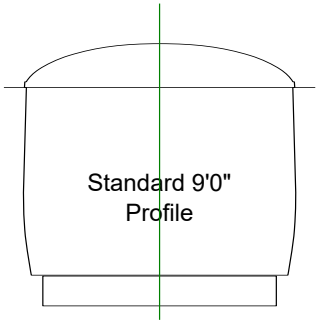

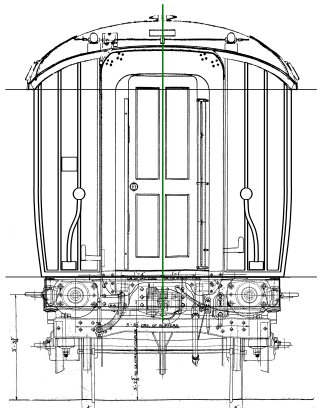
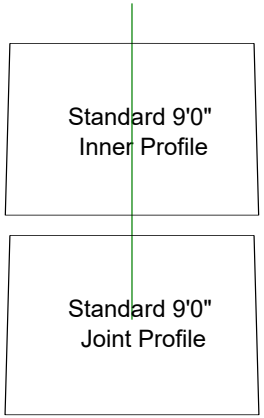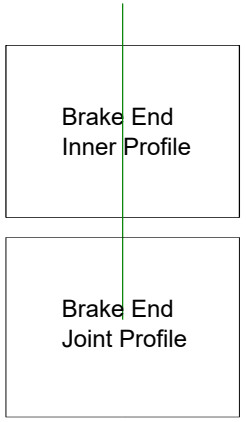
LNER 8'6" Brake End