JIB ASSEMBLY. - 1) Carefully detach the main jib from the fret, remove any parts contained in this and carefully form up, ensure these are square, fit the spacers in their respective positions (30) lower underside (29) high positions underside, (53) (MK1) on top side, crank this slightly to avoid fouling curve.
2) Prepare the lower plate (35) by pressing out the rivet detail, on either type bend the form to match the underside of the jib, fit in position checking the overlap is equal both sides, clean up the nose end flush with profile.
3) Prepare the rivets in the top plate (33) having auxilary parts in position at the lower end of the jib, again equalise the overlap, on the Mk2 version match the width over the long strips to that on part (34), this also applies to the Mk2 jib to a lesser degree.
4) Form up the top section (34) to match the jib profile, position by bending down front flange, adjust the lower length of the top arc to match up with part (33) bend up the pulley cover side plates and fit in position.
5) Fit the various overlaps to the jib sides (see assembly drawing) and the top rivetted strips (on the Mark 1 jib the central rivets on part 43 should be removed after fitting to seat part 44, later issues will not require this mod). Fit the overlays (31&32) to the lower end of the jib, finally bend up the pulley cover housing (36) and carefully fit in position.

RIGGING.- This is generally self explanatory following the drawing, for the Mk2 crane we have 'lozenge' side plates (46) for the derricking double pulley as these seem to be used quite often, they should be assembled with a Ø 1/32" rod through the pulley and two Ø0.5mm ones through the outer holes, all pulleys should be drilled Ø 1/32" through.
Make up the large hoisting hook assembly from the links enclosed on the side of the sheet.

PAINTING.-Details of painting are very sparse for most periods, in general the livery seems to have followed that applied to the passenger locomotives in the early days lined out in accordance with prevailing practice on solebars and large areas, under-frame colours probably being used for wheels and possibly gears etc, finishes being maintained to a high standard.
These practices followed through into the early days of grouping at least, LMS cranes continued to be painted, lined out 'Midland Red' whilst the LNER received the mixed traffic Black with red and white lining, engineers grey and red oxide paint were generally used on the G.W.
During the BR period the unlined Black livery was gradually adopted, again as a result of standard loco practice.
Once again photographs should be consulted where ever possible, running numbers are given in the attached table.
REFERENCES.-A good selection can be seen in Trains In Trouble Vol 1-4, MRC 5/71 (G&SW), GC. Vol 3 p19. LNER Wagons P144, Railway Steam Cranes - J.S.Brownlie

D & S Models, 46 The Street, Wallington, Nr Baldock, Herts, SG7, 6SW.

© 4/87.

COWAN SHELDON 15 Ton STEAM CRANE

This kit represents the Standard Cowans 15T Steam Crane built in the 1890's, the type was developed from two cranes ordered by the Caledonian in 1885, followed by one for the Highland the next year, from these evolved the 'standard' version which proved to be extremely popular with many of the pre-group companies at that time.
The term 'standard' should be treated with caution basically they can be divided into two versions, the earlier Mark 1 type can be distingushed by its curved jib, on this type the boiler was set higher and the slewing race wheels (2 in number) were inclined onto the turntable, with the later Mark 2 a 'swan neck' jib had been developed, the boiler set lower and the 'Crab' superstructure carried on 3 race rollers mounted in a vertical position, the Derricking drum gear was also mounted differantly and the associated chain rigging changed. The jib lengths also varied in both cases, we have opted for the longer version, for the really fastideous there is the possibility this could be shortened at the lower end, the upper ends being the same, detail differences should be checked with photographs, one of the best references is the Trains in Trouble series where numerous examples are shown in action, later additions such as additional handrails and all manner of drivers shelter should be looked for.
One area where we have not been able to glean much information is the drivers controls and for this reason the kit is rather bare in this area, these would comprise of various valves and handwheels for engaging the gear trains, we would welcome any details of this area and the attendant gear shaft which transmits power to the travelling and slewing motions.

The train of vehicles attendant to the cranes could vary over the years and from one company to another, riding and stores vans were generally redundant revenue stock, jib runners could be custom built or converted standard types, because of this it is not really practical to supply this with the kit, there are wagons available in kit form for conversion, several formations are shown in the diagrams.
To try and ease access around curves the vehicle has been designed as a bogie vehicle rather than the 4-4-0 arrangement of the prototype which can give excessive front end swing, the lower end of the jib has a fork location which will allow a little movement at this point, this can be utilized by fitting lateral stops on the runner trestle to control the jib position.

Our sincere thanks to Peter Tatlow for supplying the information for this kit, and permission to use his drawings.

ASSEMBLY INSTRUCTIONS.
Identify the parts in the fret and clean with a glass fibre brush if necessary,these can be detached with shears or a craft knife, small parts can be left on the fret until required or cut up in one go, either way store safely until required.
For joints we recommend solder, ordinary tinmans 60/40 for main jointing and low melt for small accessories where strength is not critical, use with a flux such as Eames 40, latter parts can also be applied successfully with cyno acrylic super glue's provided the work is clean and all soldering has been completed. All bends in this kit can be done in a small jaw vice or pliers, a small pair of toolmakers clamps are sometimes usefull for holding small parts when removing tags. To facilitate bending an etched line is incorparated in these positions, unless stated otherwise, this is always on the inside of the bend, some of the longer bends have relieving slots but where this could impair the look of the finished side I omit them and recommend the following method, place the part bend groove upmost on a firm surface, place a sheet of paper between these to avoid scuffing detail, then take a triangular needle file and deepen the slot until a witness line shows on the other side, avoid overwidening the slot and use a sharp file to avoid work hardening, watch out for the file point, I use this method on our custom built items rather than filling and making good relieving slots. Tumblehome on the lower coach side can be formed around a rod of slightly smaller radius than that required. For long bends clamp securely between straight edges. Our passenger stock is generally in two parts-body and chassis to facilitate painting, before painting ensure the model is free from grease etc, I usually use a standard grey cellelose primer, which is generally adequate if the necessary preparation is done, spray this and subsequent coats for the best results, handrail detail and door handles (filed from pin heads) and glazing are added finally, I also finish coach models with a satin varnish as this improves the colour rendering and handling.

BOGIE & CARRIAGE FRAME ASSEMBLY. - The bogies on this assembly can be built up first.
1) Detach the bogie bolster (9) and pivot plates (10), form up the bolster (9), for 00 gauge trim the ends of the turn-up flanges back to the half etched line before bending, fit the plates locating in the slots, use the outer ones for EM/18.83 and the inner ones for 00, seam up to form a box section. Repeat this for the rear bogie using parts (13) and (14), note the tab-slots locations are offset, assemble to bring all bearing holes in line.
2) Detach bogie side frames (6), bend lower flange squarely, do not foul up pivot hole, take parts (7) & (8) and fit to outer faces of (6) line up holes with a small bush remove before fixing) check running fit of pivot hole on bearing after assembly. Fit the 2,0mm top hat bearings (flange inside), assemble unit using 12BA screws from inside bolster into the brass bushes, unit should pivot freely extreme movement being controlled by bolster overhang.
3) Repeat this for the rear bogie assembly using (11)&(12), fit two washers (15) to each plate as per (7)&(8) to build up bearing length. When completed the Brakes can be fitted after the wheelsets are in position, pass a Ø.02" rod through the mounting holes and attach the brake shoes to the ends of these adjusting for gauge, the cast shoes can be applied to these to simulate the thick wooden brake blocks.

4) Commence building the carriage by assembling the solebars outside the buffer beams to form a square open frame, the solebars should be flange down and the lower edge of the buffer beam should be flat with this. Assemble the sub-floor to this unit locating in the upper recess, then fit the bogie support cross members boss down between the frames, the one with the extra support pads fits at the front bogie end, boss face should align with lower solebar edge, position from pads on inside face of solebar, drop in the larger threaded bushes and secure, the lower end should project approx 1,0mm, do not foul the clearance of plates (3&4).

Drill out the top of the centre bearing post Ø1,0 x 4,0mm deep, thread the spacing bush on at the bottom end and use this to locate the turntable in position, the bearing post should be square to the turntable top.
5) Fit axleboxes to the bearing plates (3&4) remove the stub locations for clearance, fit these behind the solebars, note the position of (4) which will carry the clutch wheel, note before fitting there are small oiler pipes down the face of the solebar, drilling up ,through the lower flange may be the best way of fitting these.
6) Fit the buffer beam overlays (2) and the buffers, fit the rail clip brackets in position, cut a small slot in the front angle before fitting.
7) Form the rivet detail in the deck (1) and fit to the carriage top, equalize the overlap all round. If the crane is to be modelled in a normal 'at rest or running' position fit the locking pegs in position, these project up through the underside of the bunker assembly to position the crab superstructure in a straight mode.

CRAB SUPERSTRUCTURE ASSEMBLY.- This will be best done in a series of sub-assembly's, where the assembly differs for Mk1 & Mk2 will be detailed.
1) Assemble the worm gear to the derricking chain drum, check the fit in the support plates (47,48) and put aside for assembly. Bend over the support bracket on (47) and re-inforce corner, size the small holes in (47,48) to Ø1,0mm and using a rod of this diameter to position from the main side frame fit these plates to the main frame, the top face is parallel to the frame base, this can be checked by fitting the overlays (49).
2) Assemble the large spoked gear to the hoisting drum, reduce the projecting spigot in the drum to 1,5mm long , check the holes in the side frames will recieve these,also check the long gear shaft fit into the keyhole location and the fit of the crank wheels on the ends of these.
Cut the brake drum shaft Ø2x20,0mm long and fit on the gear/brake drum, set the small boss 1,5mm in from one end, put aside for assembly.
3) Mark 1 Only.-Jib support pulley housing, take this casting and drill out the side bosses so that a Ø1,0 rod can be passed through, assemble the pulley casting into the housing, do not block the pivot hole, take the crab side frames and drill out the forward bosses Ø1.0x2,0mm deep, do not break through, cut a shaft Ø1,0x18,0, set parts aside for assembly, drill two grab handle holes in each side plate for the drivers access.
3) Mark 2 Only. - Take the crab side frames and drill out the forward bushes Ø1,0 through,remove the top row of 4 rivets below the gear bosses, drill out the drivers grab handle holes, also mark out for the horizontal grab handle holes Ø05mm, check out your particular crane prototype if possible, heights vary.Make the front double roller assembly, clean up the location face.
4) Take the bridge casting and drill out the central hole Ø10mm through, drill from both ends to maintain squareness, fit in Ø1,0 rod to project 3,0down.
6) Fit the worm/bevel gear shaft in position, ease the base on the bridge casting to allow this to seat, try the drive gear shaft in position and ease the gear contact to give a projection through the plate of 0,5mm (Ø2mm). Fit the lower spacers to the side frame, for the Mk1 crane the horizontal bevelgear shaft can be mounted in place on the lower support plate, reduce the height of the housing carrying the slewing gear crown wheel to obtain a touch fit. The lower support plates fit below the location strip and abut the rear location strip, fit the large boiler support plate on top of the location strip for Mk1, below for Mk2.
7) Assemble the other side plate with the gear shafts in position - Derricking gear and drum, Hoisting gear and drum, brake gear and drum - on the Markl crane the jib support pulley and shaft must also be fitted. Remember to paint those parts before they become unreachable, use the bridge casting pin-lined in position to help squareness.
8) The Crab gearbox assembly can now be tried in position on the carriage, and the support roller set;
MARK 1. - With the bridge casting s pinned ld loosely in position lower the assembly over the centre post until the bridge pin locates in the top of the post and the whole rests on the spacing bush, the jib support pulley should just touch the turntable angled face, slide in the rear support pulley unit from the top at a angle to touch the turntable, it should just rest on the location pad, fix in position. The bridge plate can now be fixed in position but do not secure the locating rod, fit the drivers floor in place. Fit the upper thrust roller in position on the projecting bridge casting lugs, the lower side of the roller should be carefully backed off to allow the unit to be withdrawn upwards.
Finally place the drive shaft into position, ease the bevel gear as necessary.
MARK 2. - Assemble basically as per Mk 1 type, the front double roller is independant of the jib cross shaft and sits on top of the location strips, fit the crown wheel and pinion as per Mk1 (Note6), the rear single pulley slides down between the vertical location strips.

BUNKER & TANK ASSEMBLY.-1) Bend up tank plate (19), top and front flanges are square, the rear vertical one should match the floor (18) profile, fit the form plate (20) under the tank top which should overhang it. These can now be fitted squarely to the floor (18) ensure the latter is flat and level.
2) Bend up the bunker plate (22) fit the bunker sub-base (23) and bulkhead (24) to this, assemble this unit to the floor (18).
3) Form up the tank wrap (21) form the small radius first noting the rivet detail positions, fit in position. Bend up the bunker wrap (25) generally as above, form the lower profile first and then the upper bunker extension to follow the profile on plate (23), fit in position.
4) Form the rivet detail in the back plate (26), bend to a slight curve , attach top strips (26a) and fit in position, finalise by adding the hinges (27) to the tank filler and rear access plate.

BOILER.- Clean up the boiler halves, join up and fit the top, generally the boiler was fitted as per the drawings and this should be used to position the various pipes etc which we leave to the builders ingenuety, these can be bent up from the rodding provided, prototype photographs should be consulted wherever possible as there seem to numerous combinations of fittings, on some of the Midland No28 for instance (Mk1) the access cover is more to the side than the rear with the safety valve on the other side. Chimneys dont seem to have been fitted very often and are probably best modelled in the 'rest position'. The boiler assembly mounts between the crab side frames on the floor provided.

CYLINDER ASSEMBLY.- Start by fabricating the tubular crosshead guides from the Ø 1/8" o/D tube supplied, cut to length and with the part held axially in a vice form the cut-away portion using round and sqaure needle files,this is really not too difficult to do on one side and is probably sufficient for most models, on the prototype it is present on both sides of the tube and care is needed to avoid distorting this. Drill out the piston rod hole Ø0,5 in the cylinders and fit the tube guide in position, present the cylinders to the side frames and mark position, these varied slightly between the two types and the Mk 1 it will be necessary to clear away under one corner for seating purposes, fit in position.
Assemble the connecting rod laminates and fit the piston rod, clear the 'big-end' hole Ø 1/32", do this also for the crank wheels and place on the ends of the drive shaft, enter the piston rod into the quids and connect up to the crank wheel.

COWANS, SHELDON 15 TON STANDARD STEAM BREAKDOWN CRANES - Curved Jib Mk I

ilway	Date built	Works No	Jib length	Travelling gear fitted	Running Pre-group	Nos Grouping	ER	Match wagon No	With-drawn	Allocation & remarks
MS&LR	1893	1847	Long	Yes		951504	125	(DE) 951663	c'65	Gorton (Retford?), Langwith Jct., Mexborough Jct. 2/59.
MR	1893	1854	Long	No	245	MP36, RS 1023/15	RS 1023/15	(DM) 114903	9/63	Durran Hill Llandudno Jct, Birkenhead '38, Stoke '39, Llandudno Jct 4/61, cut up 3/65.
MR	1893	1855	Long	No	26	MP33, RS1022/15	RS 1022/15	114904		Saltley, Gloucester 11/31, Bath 6/42, to S Reg 2/50 & wthn.
MR	1893	1856	Long	No	27	–	–	114905		Derby (to WD 1914 ?)
MR	1893	1857	Long	No	28, 243	MP34, RS1036/15	RS 1036/15	(DM) 114906	5/51	Wellingborough, Hellifield '41.
NER	1893	1858	Short	Yes	CME 1	–	–			{Gateshead} to WD 1914
NER	1893	1859	Short	Yes	CME 2	901627	–		c'55	?{Darlington}?, Tweedmouth c 22, Shildon C&W '38.
GWSW	1893	1890	Short	No		MP44, 1549 RS1057/15	RS1057/15	(DM) 191479	'63	Hurlford '93, Inverness 11/39, Wick '42, Belle Vue 9/43, Wick '44, cut up 9/63
NSR	1895	1965	Long	No		MP40, RS1027/15	RS 1027/15		1/61	Stoke '95, Birkenhead, Chester 10/40, Shrewsbury 3/43, Llandudno Jct 5/44, cut up 12/64.

OWANS, SHELDON 15 TON STANDARD STEAM BREAKDOWN CRANES - Swan neck jib Mk 2

* Earlier allocations not Known

NBR	1897	2117	Long	No		880044, 981508	n/a	981509	'50	St Margarets '07, Thornton Jcl. '14 Kittybrewster '26.
NER	1897	2118	Short	Yes	CME 3	901628	155		'58	York '97, Sunderland c'22, W Hartlepool 7/40
GCR	1898	2119	Short	Yes		951505	104			* Hornsey '47 to '60.
GCR	1898	2120	Short	Yes		951506	101			* Ardsley '47 to '56, Langwith Jct '60 to '64
GCR	1898	2121	Short	Yes		951503	121		'58	* Mexborough '47.
GCR	1898	2122	Short	Yes		SB9, 941594	109		'61	* Grantham c '37.
LBSC	1898	2181	Long	Yes	16	315S	DS 315	315SM, DS3090	2/63	Brighton '98, Ashford (K) c '26, Ramsgate c'38.
LBSC	1898	2182	Long	Yes	17	316S	DS 316	{i 316SM, ii DS 224 '26 from '53}	3/63	New Cross Gate '98, Stewarts Lane c'58
MR	1898	2234	Long	No	244	MP31, RS1037/15	RS1037/15	(DM) 114951,	2/61	Kentish Town '99, Nottingham c27, cut up 5/63.
MR	1898	2235	Long	No	30,	MP41, RS1028/15	RS1028/15	(DM) 116952	1/66	Leeds, Wakefield 3/25, Accrington 2/43, Hellifield 2/59.
MR	1899	2236	Long	No	347	MP38, RS1025/15	RS1025/15	(DM) 116553	'61	Bristol, Warrington, Edge Hill 7/37, Bletchley 12/42 to 4/61.
MR	1899	2237	Long	No	246	MP35, RS1021/15	RS 1021/15	(DM) 116950	3/67	Belle Vue '99, Longsight 7/35, Bolton (yard only) 3/66.
GN	1899	2246	Long	No	150A	961604	na	961658	'54	Doncaster '99, Norwich ? 37, Colchester '47
GN	1899	2247	Long	No	152A	941595	106		'55	Peterborough '99, Colwick '14.
SER	1899	2250	Long	Yes	L3	202S	DS 202	202SM, DS3089	11/62	Ashford (K) '00, Stewarts Lane c'26, Gillingham c'58.
GW	1901	2406	Short	Yes	1, 7	7	7		'56	* Slough c04 Oswestry c25 Swindon ..48
MR	1901	2421	Long	No	248	MP32, RS1030/15	RS 1030/15	(DM) 117264	2/59	Sheffield '01, Hasland '31, Hellifield 10/50.
GW	1901	2448	Short	Yes	8	8	8		c'62	* Newton Abbot 8/36 to 10/60
GW	1901	2449	Short	Yes	6	6	6		'65	* Neath 8/36 to 11/57
MT &S	1906	2933	Long non std	Yes	(MR) 250	MP37, RS1024/15	RS 1024/15	1855, (DM) 117654	4/63	Plaistow '06, Bescot 4/33.

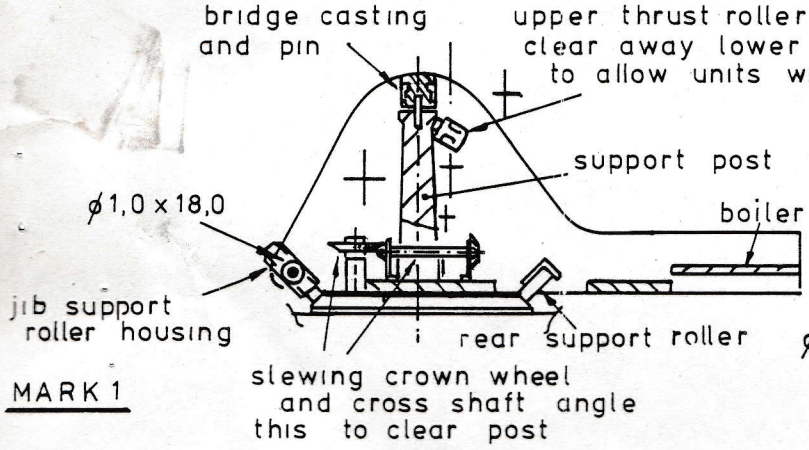

MARK 1

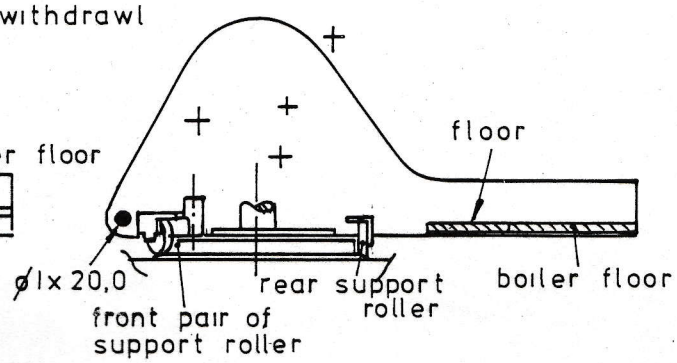

MARK 2

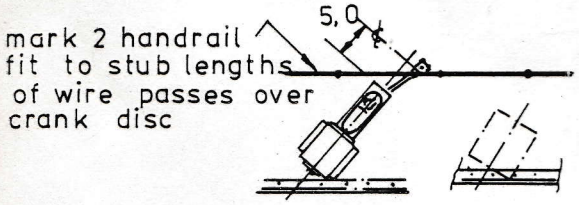

Cylinder-set angle as above, for the mark I the bottom corner sits against the lower flange, on the mark 2 the rivetted strip

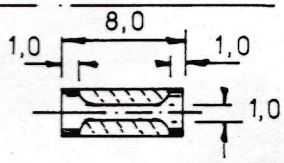

Piston Rod Guide
cut away shaded areas

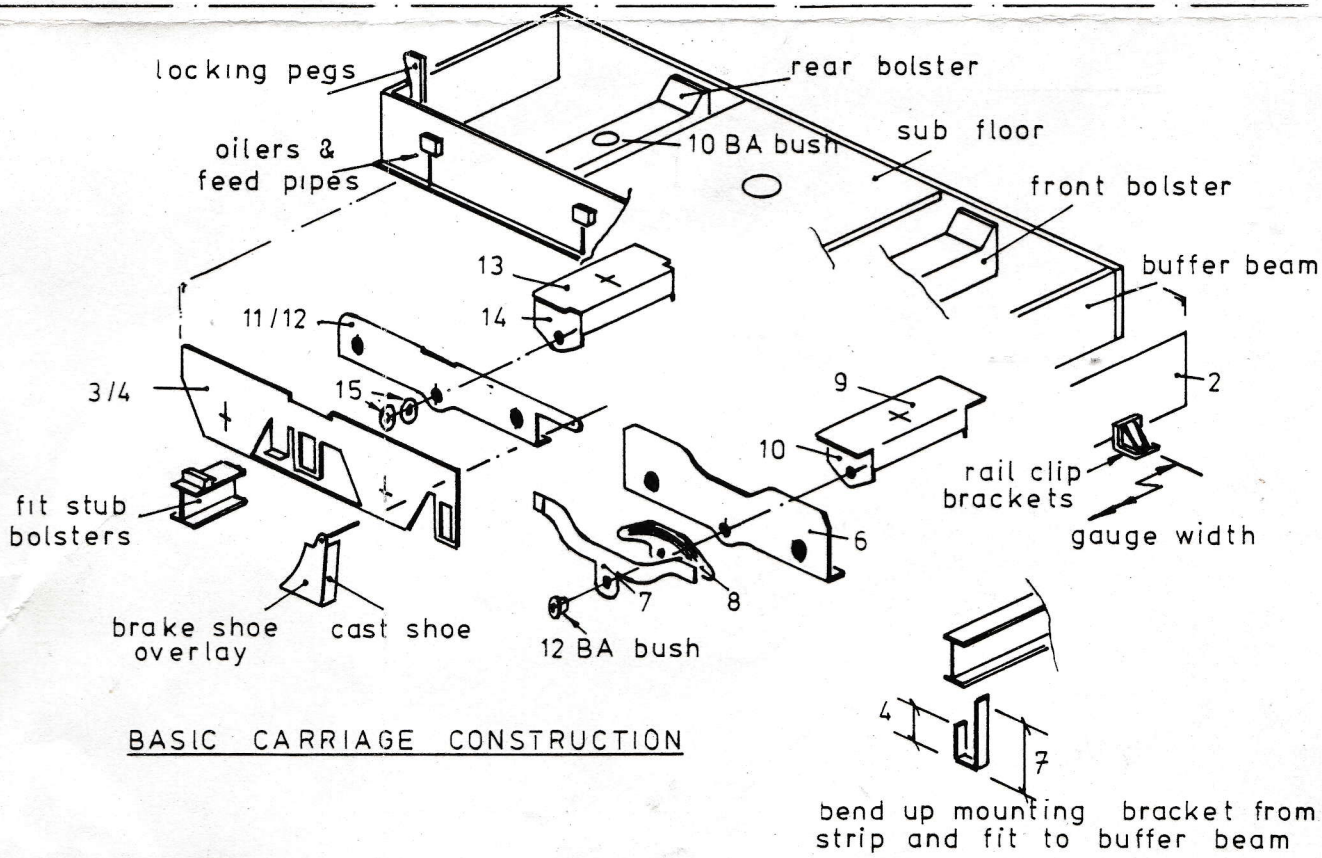

BASIC CARRIAGE CONSTRUCTION

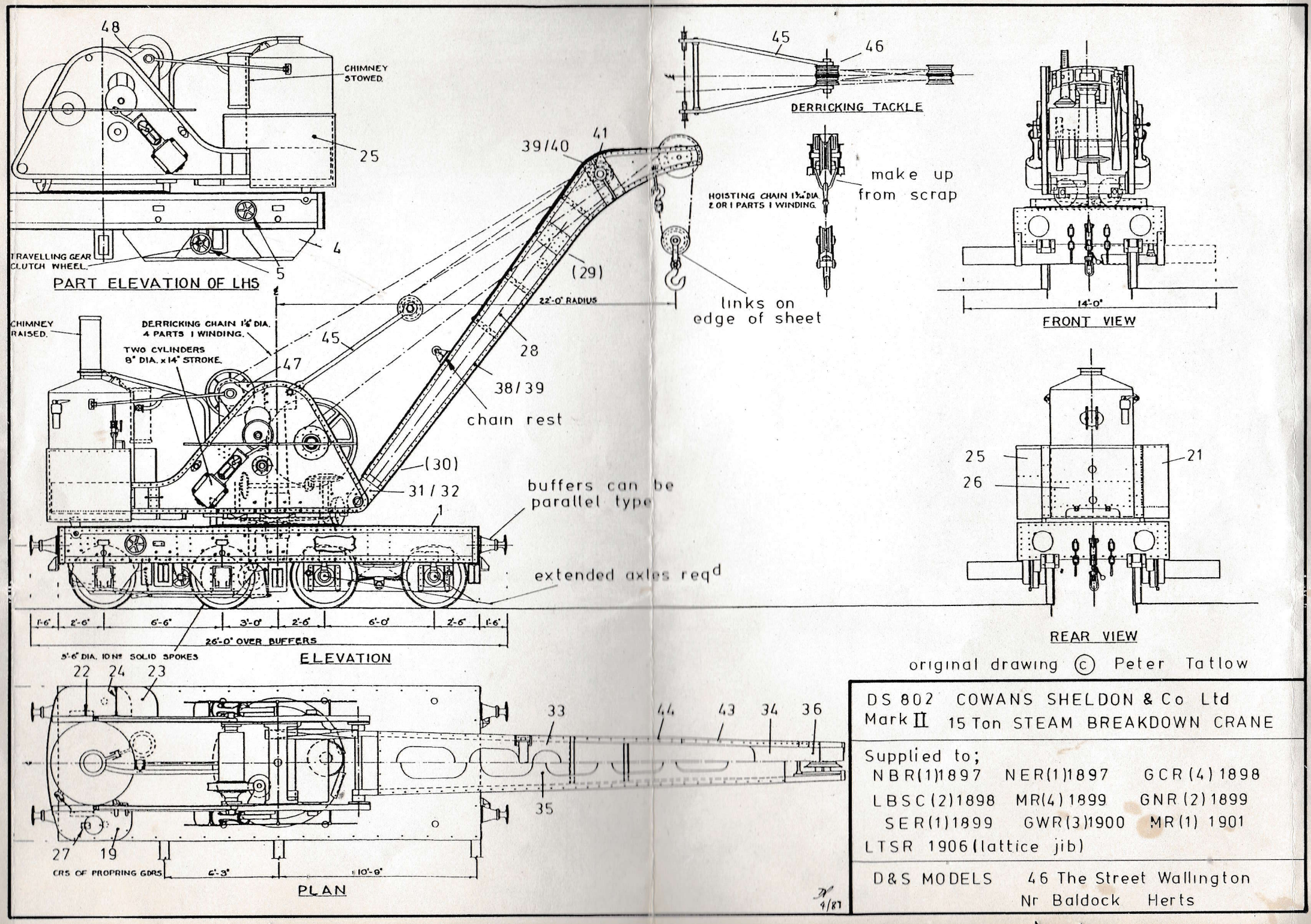

original drawing © Peter Tatlow

DS 802 COWANS SHELDON & Co Ltd
Mark II 15 Ton STEAM BREAKDOWN CRANE

Supplied to;
NBR(1)1897 NER(1)1897 GCR(4)1898
LBSC(2)1898 MR(4)1899 GNR(2)1899
SER(1)1899 GWR(3)1900 MR(1) 1901
LTSR 1906 (lattice jib)

D&S MODELS 46 The Street Wallington
Nr Baldock Herts

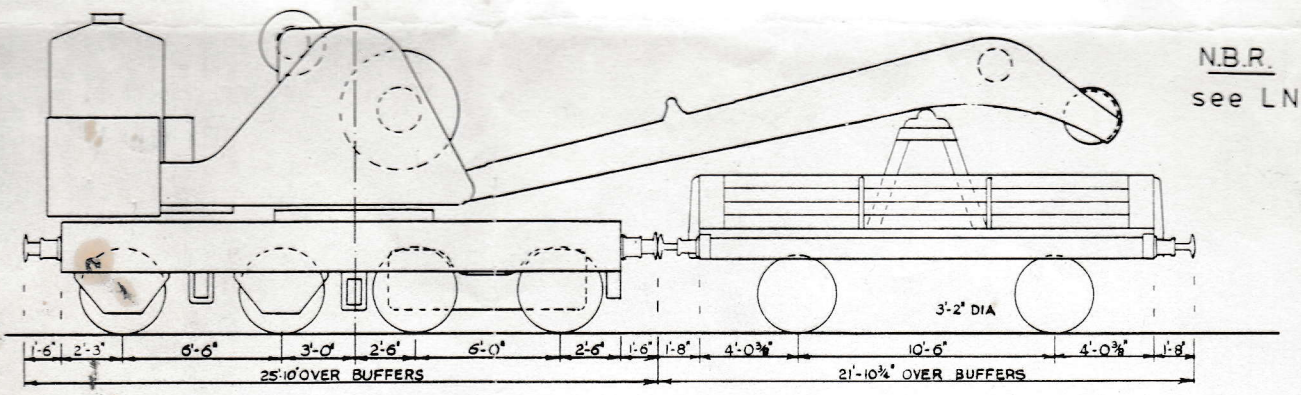

N.B.R.
see LNER Wagons
P 144

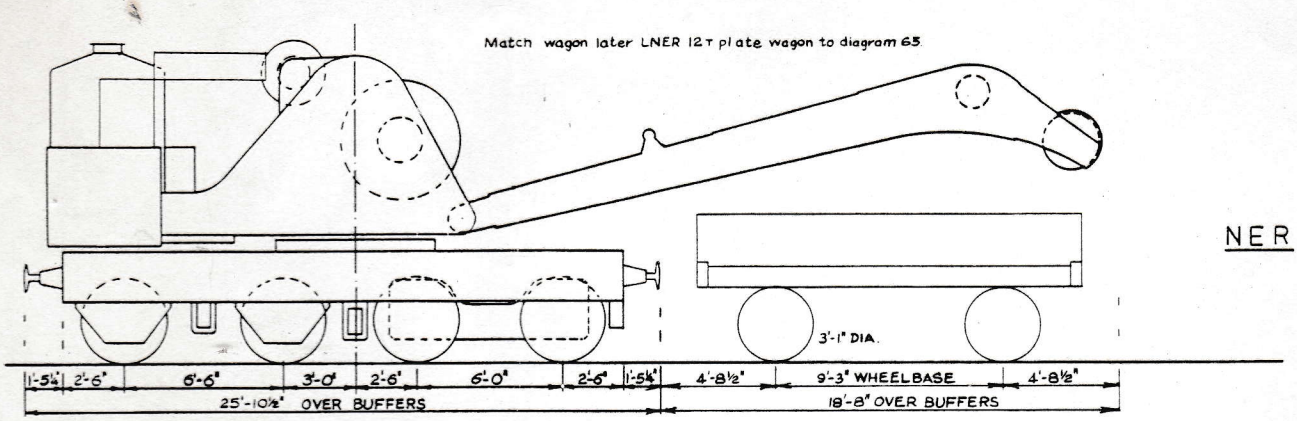

NER

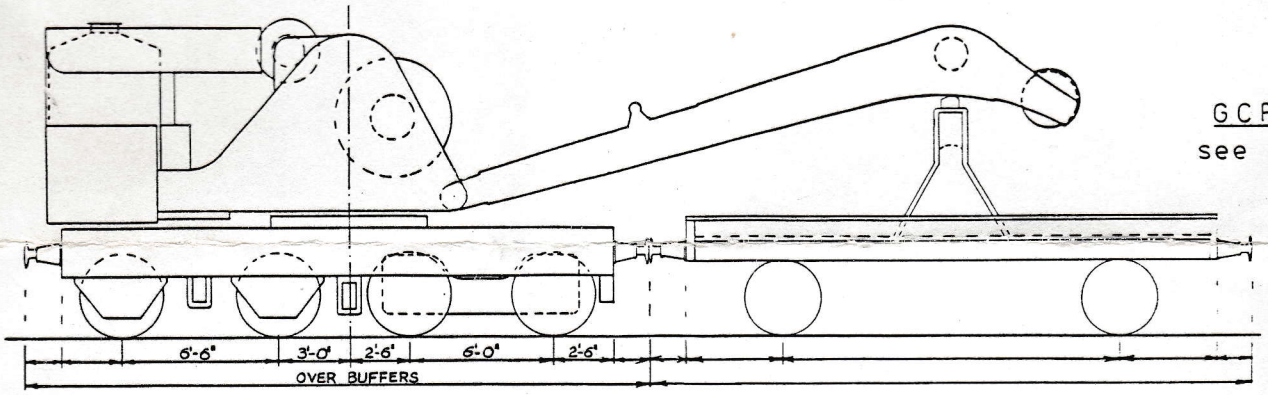

GCR
see GC Vol 3
P 19

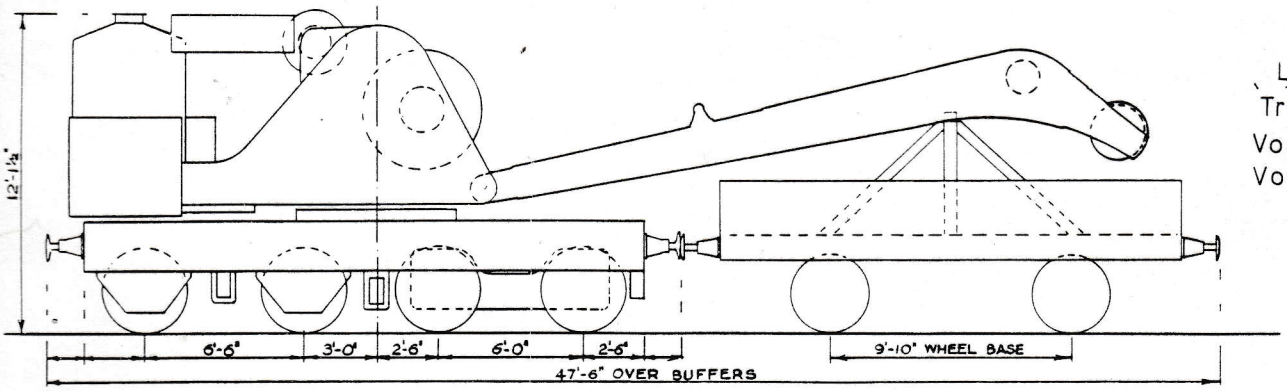

LBSC see
Trains in Trouble
Vol 3 1937
Vol 1 1904

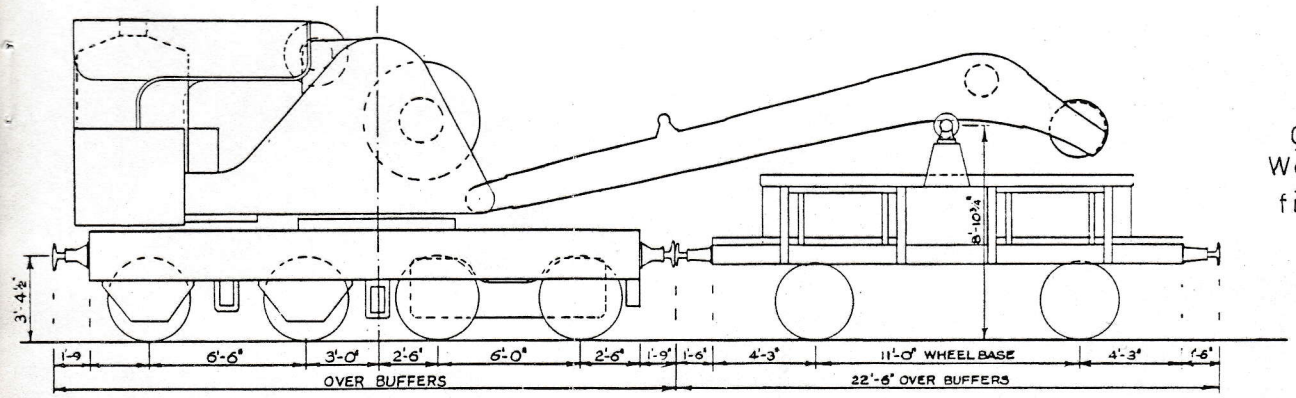

GWR see
Wagon App
fig 310, 334, crane
327